U.S. Department of Transportation
Federal Highway Administration

1200 New Jersey Ave., SE
Washington, D.C. 20590

July 1, 2016

In Reply Refer To:
HSST-1/CC-66C

Mr. Gerrit Dyke, P.E.
Lindsay Transportation Solutions
180 River Road
Rio Vista, CA 94571

Dear Mr. Dyke:

This letter is in response to your December 29, 2015 request for the Federal Highway Administration (FHWA) to review a roadside safety device, hardware, or system for eligibility for reimbursement under the Federal-aid highway program. This FHWA letter of eligibility is assigned FHWA control number CC-66C and is valid until a subsequent letter is issued by FHWA that expressly references this device.

Decision

The following devices are eligible, with details provided in the form which is attached as an integral part of this letter:

- ABSORB 350 with modified connecting rod

Scope of this Letter

To be found eligible for Federal-aid funding, modified roadside safety devices should meet the crash test and evaluation criteria contained in the National Cooperative Highway Research Program (NCHRP) Report 350. However, the FHWA, the Department of Transportation, and the United States Government do not regulate the manufacture of roadside safety devices. Eligibility for reimbursement under the Federal-aid highway program does not establish approval, certification or endorsement of the device for any particular purpose or use.

This letter is not a determination by the FHWA, the Department of Transportation, or the United States Government that a vehicle crash involving the device will result in any particular outcome, nor is it a guarantee of the in-service performance of this device. Proper manufacturing, installation, and maintenance are required in order for this device to function as tested.

This finding of eligibility is limited to the crashworthiness of the system and does not cover other structural features, nor conformity with the Manual on Uniform Traffic Control Devices.

Eligibility for Reimbursement

FHWA previously issued an eligibility letter for the roadside safety system described in your pending request. Your pending request now identifies a modification to that roadside safety system.

The original roadside safety device information is provided here:

Name of system: ABSORB 350 with modified connecting rod

Type of system: Crash Cushion
Date of original request: March 6, 2000
Date of original FHWA eligibility letter: May 11, 2000
FHWA Control number: CC-66

The pending modification(s) consists of the following changes:

1. Increase the number of threads on connecting rods

FHWA concurs with the recommendation of the accredited crash testing laboratory as stated within the attached form.

Full Description of the Eligible Device

The device and supporting documentation, including reports of the crash tests or other testing done, videos of any crash testing, and/or drawings of the device, are described in the attached form.

Notice

If a manufacturer makes any modification to any of their roadside safety hardware that has an existing eligibility letter from FHWA, the manufacturer must notify FHWA of such modification with a request for continued eligibility for reimbursement. The notice of all modifications to a device must be accompanied by:

- Significant modifications – For these modifications, crash test results must be submitted with accompanying documentation and videos.
- Non-signification modifications – For these modifications, a statement from the crash test laboratory on the potential effect of the modification on the ability of the device to meet the relevant crash test criteria.

FHWA's determination of continued eligibility for the modified hardware will be based on whether the modified hardware will continue to meet the relevant crash test criteria.

You are expected to supply potential users with sufficient information on design, installation and maintenance requirements to ensure proper performance.

You are expected to certify to potential users that the hardware furnished has the same chemistry, mechanical properties, and geometry as that submitted for review, and that it will meet the test and evaluation criteria of the NCHRP Report 350.

Issuance of this letter does not convey property rights of any sort or any exclusive privilege. This letter is based on the premise that information and reports submitted by you are accurate and correct. We reserve the right to modify or revoke this letter if: (1) there are any inaccuracies in the information submitted in support of your request for this letter, (2) the qualification testing was flawed, (3) in-service performance or other information reveals safety problems, (4) the system is significantly different from the version that was crash tested, or (5) any other information indicates that the letter was issued in error or otherwise does not reflect full and complete information about the crashworthiness of the system.

Standard Provisions

- To prevent misunderstanding by others, this letter of eligibility designated as FHWA control number CC-66C shall not be reproduced except in full. This letter and the test documentation upon which it is based are public information. All such letters and documentation may be reviewed upon request.

- This letter shall not be construed as authorization or consent by the FHWA to use, manufacture, or sell any patented system for which the applicant is not the patent holder.

- If the subject device is a patented product it may be considered to be proprietary. If proprietary systems are specified by a highway agency for use on Federal-aid projects: (a) they must be supplied through competitive bidding with equally suitable unpatented items; (b) the highway agency must certify that they are essential for synchronization with the existing highway facilities or that no equally suitable alternative exists; or (c) they must be used for research or for a distinctive type of construction on relatively short sections of road for experimental purposes. Our regulations concerning proprietary products are contained in Title 23, Code of Federal Regulations, Section 635.411.

Sincerely yours,

Michael S. Griffith

Michael S. Griffith
Director, Office of Safety Technologies
Office of Safety

Enclosures

Request for Federal Aid Reimbursement Eligibility of Highway Safety Hardware

Submitter	Date of Request:	December 29, 2015	○ New ◉ Resubmission
	Name:	Gerrit Dyke, P.E.	
	Company:	Lindsay Transportation Solutions	
	Address:	180 River Road, Rio Vista, CA, 94571	
	Country:	USA	
	To:	Michael S. Griffith, Director FHWA, Office of Safety Technologies	

I request the following devices be considered eligible for reimbursement under the Federal-aid highway program.

Device & Testing Criterion - Enter from right to left starting with Test Level

System Type	Submission Type	Device Name / Variant	Testing Criterion	Test Level
'CC': Crash Cushions, Attenuators, & Terminals	○ Physical Crash Testing ◉ Engineering Analysis	ABSORB 350	NCHRP Report 350	TL3

By submitting this request for review and evaluation by the Federal Highway Administration, I certify that the product(s) was (were) tested in conformity with the NCHRP Report 350 (Report 350) and that the evaluation results meet the appropriate evaluation criteria in the Report 350.

Individual or Organization responsible for the product:

Contact Name:	Gerrit Dyke, P.E.	Same as Submitter ☒
Company Name:	Lindsay Transportation Solutions	Same as Submitter ☒
Address:	180 River Road, Rio Vista, CA, 94571	Same as Submitter ☒
Country:	USA	Same as Submitter ☒

Enter below all disclosures of financial interests as required by the FHWA 'Federal-Aid Reimbursement Eligibility Process for Safety Hardware Devices' document.

Safe Technologies, Inc. (STI) performs testing and analysis services for Lindsay Transportation Solutions, Inc. (LTS). STI is a wholly owned subsidiary of LTS. STI is a fully accredited crash test facility by A2LA to ISO 17025 and recognized by the US Federal Highway Administration (FHWA) to perform full scale crash tests per NCHRP Report 350 and MASH criteria. STI also performs crash tests per the European EN1317 criteria in conjunction with an independent Notified Body. An Advisory Board includes third party industry experts and provides oversight and guidance to the laboratory management.
The STI laboratory manager, technicians, and laborers are compensated by LTS for salaries and wages. The STI staff does not receive any incentive, compensation, commissions, or professional fees corresponding to the outcome of any testing or analysis. The third party members of the Advisory Board are typically paid consultants. STI or staff does not receive any research funding or other research support from LTS. STI and staff also do not have any financial interest in patents, copyrights, or other intellectual property associated with the products they perform testing or analysis on.

PRODUCT DESCRIPTION

New Hardware or Significant Modification ◯ Modification to Existing Hardware ◉ Non-Significant

The ABSORB 350 is a proprietary crash cushion that has been accepted for use on the National Highway System by FHWA under letter HSA-CC66.

The ABSORB 350 is a non-redirective, gating crash cushion primarily intended to shield the approach ends of temporary and permanent concrete barriers as well as the end of a Quick Change Median Barrier (QMB) wall. The ABSORB 350 system consists of a nose-piece assembly, followed by four, eight, or nine element assemblies (dictated by the roadway speed requirements) and terminated by a transition/attachment assembly.

The element assemblies consist of polyethylene elements that are clamped between two hinge brackets, one on each end of each element. The hinge brackets are connected to each other by four structural rods, two on each side of the element. The hinge components and connection hardware is made from mild steel.

The proposed modification involves a slight change to the longitudinal metal rods that attach the steel hardware to the polyurethane barriers. Occasionally, due to manufacturing tolerances the rods do not have enough threads on their ends to fully clamp down on the elements. This proposal increases the number of threads to allow for full clamping regardless of variation in manufacturing.
This modification represents no change to the function, capacity or performance of the component and system.

CRASH TESTING

By signature below, the Engineer affiliated with the testing laboratory, agrees in support of this submission that the Modification to Existing Hardware is deemed Non-significant for the device listed above to meet the Report 350 Criteria.

Engineer Name:	Joseph Nagy	
Engineer Signature:	Joseph Nagy	Digitally signed by Joseph Nagy Date: 2016.06.17 14:44:50 -07'00'
Address:	170 River Road, Rio Vista, CA 94571	Same as Submitter ☐
Country:	USA	Same as Submitter ☐

A brief description of each crash test and its result:

Required Test Number	Narrative Description	Evaluation Results
3-30 (820C)	Since the Absorb 350 is a Non-redirective crash Cushion , this test does not apply.	Non-Relevant Test, not conducted
S3-30 (700C	Since the Absorb 350 is a Non-redirective crash Cushion , this test does not apply.	Non-Relevant Test, not conducted
3-31 (2000P)	Since the Absorb 350 is a Non-redirective crash Cushion , this test does not apply.	Non-Relevant Test, not conducted
3-32 (820C)	Since the Absorb 350 is a Non-redirective crash Cushion , this test does not apply.	Non-Relevant Test, not conducted
S3-32 (700C)	Since the Absorb 350 is a Non-redirective crash Cushion , this test does not apply.	Non-Relevant Test, not conducted
3-33 (2000P)	Since the Absorb 350 is a Non-redirective crash Cushion , this test does not apply.	Non-Relevant Test, not conducted
3-34 (820C)	Since the Absorb 350 is a Non-redirective crash Cushion , this test does not apply.	Non-Relevant Test, not conducted

Required Test Number	Narrative Description	Evaluation Results
S3-34 (700C)	Since the Absorb 350 is a Non-redirective crash Cushion , this test does not apply.	Non-Relevant Test, not conducted
3-35 (2000P)	Since the Absorb 350 is a Non-redirective crash Cushion , this test does not apply.	Non-Relevant Test, not conducted
3-36 (820C)	Since the Absorb 350 is a Non-redirective crash Cushion , this test does not apply.	Non-Relevant Test, not conducted
S3-36 (700C)	Since the Absorb 350 is a Non-redirective crash Cushion , this test does not apply.	Non-Relevant Test, not conducted
3-37 (2000P)	Since the Absorb 350 is a Non-redirective crash Cushion , this test does not apply.	Non-Relevant Test, not conducted
3-38 (2000P)	Since the Absorb 350 is a Non-redirective crash Cushion , this test does not apply.	Non-Relevant Test, not conducted
3-39 (2000P)	Since the Absorb 350 is a Non-redirective crash Cushion , this test does not apply.	Non-Relevant Test, not conducted
3-40 (2000P)	This test was originally run to support Eligibility Letter CC-66. The proposed modification represents no change to the function, capacity or performance of the ABSORB system.	Modification has no effect on crashworthiness
S3-40 (700C)	Optional test, was not run. This modification represents no change to the function, capacity or performance of the ABSORB system.	Non-Relevant Test, not conducted
3-41 (2000P)	This test was originally run to support Eligibility Letter CC-66. The proposed modification represents no change to the function, capacity or performance of the ABSORB system.	Modification has no effect on crashworthiness
3-42 (820C)	When Eligibility Letter CC-66 was issued, this test was determined to be non-critical. The proposed modification represents no change to the function, capacity or performance of the ABSORB system.	Non-Relevant Test, not conducted
S3-42 (700C)	Optional test, was not run. This modification represents no change to the function, capacity or performance of the ABSORB system.	Non-Relevant Test, not conducted
3-43 (2000P)	This test was originally run to support Eligibility Letter CC-66. The proposed modification represents no change to the function, capacity or performance of the ABSORB system.	Modification has no effect on crashworthiness
3-44 (2000P)	This test was originally run to support Eligibility Letter CC-66. The proposed modification represents no change to the function, capacity or performance of the ABSORB system.	Modification has no effect on crashworthiness

Testing Laboratory's signature concurs that these modifications are considered Non-Significant.		
Laboratory Name:	Safe Technologies, Inc.	
Laboratory Signature:	Joseph Nagy Digitally signed by Joseph Nagy Date: 2016.06.17 14:55:45 -07'00'	
Address:	170 River Road, Rio Vista, CA 94571	Same as Submitter ☐
Country:	USA	Same as Submitter ☐
Accreditation Certificate Number and Dates of current Accreditation period :	1851.01, Valid through March 31, 2018	

Submitter Signature*: Gerrit Dyke Digitally signed by Gerrit Dyke Date: 2016.06.17 14:56:30 -07'00'

Submit Form

ATTACHMENTS

Attach to this form:

1) Additional disclosures of related financial interest as indicated above.
2) A copy of the full test report, video, and a Test Data Summary Sheet for each test conducted in support of this request.
3) A drawing or drawings of the device(s) that conform to the Task Force-13 Drawing Specifications [Hardware Guide Drawing Standards]. For proprietary products, a single isometric line drawing is usually acceptable to illustrate the product, with detailed specifications, intended use, and contact information provided on the reverse. Additional drawings (not in TF-13 format) showing details that are relevant to understanding the dimensions and performance of the device should also be submitted to facilitate our review.

FHWA Official Business Only:

Eligibility Letter		
Number	Date	Key Words

ITEM	PART NO.	DESCRIPTION	QTY	UOM
1	B040510	AB350 Poly Barrier Assy	1	EACH
2	B030716	BSI, Male Hinge Weldment,	1	EACH
3	B030622	BSI, Female Hinge Absorb 350	1	EACH
4	BSI-1602047-KT	Absorb thrded rod and nuts kit	4	EACH
5	A010420	AB350 Hinge Pin Assembly	2	EACH
6	2000107	Nut HN 1/2-13 Gr2 Gal	8	EACH

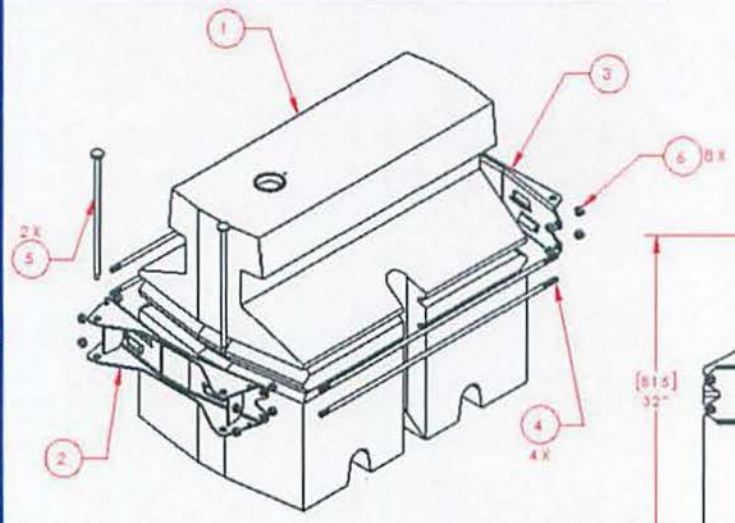

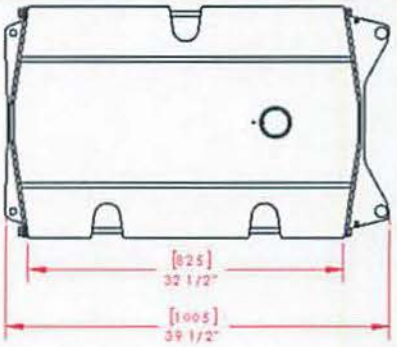

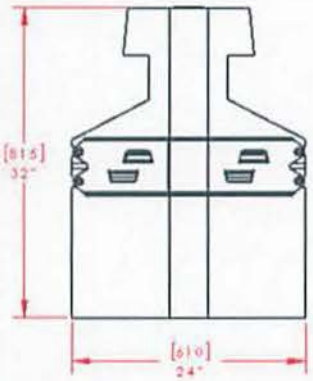

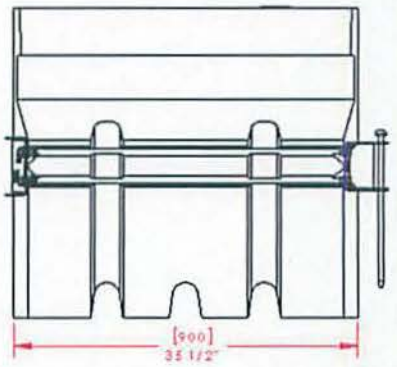

APPROVALS

		B	2999	2/17/16
		A	000624	6/4/04
		REV	ECN#	DATE

LINDSAY TRANSPORTATION SOLUTIONS

ABSORB 350 ELEMENT
ASSEMBLY P.C.B. TYPE A

SIZE B | DWG NO. B030660 | REV B

SCALE 1:10 | SHEET 1 OF 1

Doc. B100108

Item	Qty	Description	Part #	U/M
1	2.90	Bar Rd 1/2 HR A36	6001120	FT

NOTE:
THICKNESS OF WELD TO BE EQUAL TO THE THINNER OF 2 PIECES BEING JOINED WELD TO BE ALL AROUND UNLESS OTHERWISE SPECIFIED

1. FINISH: HOT DIP GALVANIZE PER ASTM A123.
2. MATERIAL: IF THREADS ARE ROLL FORMED IT IS ACCEPTABLE TO USE ROUND BAR HAVING AN OUTSIDE DIAMETER NOT LESS THAN THE MINOR DIAMETER OF THE 1/2-13 UNC THREAD (0.4056")

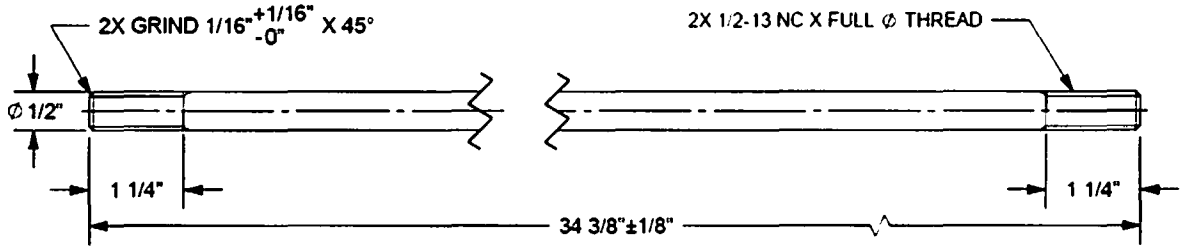

REV	CHANGES	DATE	BY	REQ'D	NEXT ASSY.	ITEM
E	ECN 1885	4/26/12	JN			
D	ECN 1468	3/10/10	DF			
C	ECN 146	3/3/01	DGB			
B	ECN 38	5/23/00	RSS			
A	R & D, NO ECN	1/19/00	DGB			

SCALE: 1:2

	DATE	INIT.
DRAWN BY	12/10/99	DGB
APPR'D BY		

Standard Tolerance
Angular ± 1/2°
Fractional ± 1/16"
Dec XXX= ± .010
Dec XX= ± .030

TITLE: THREADED RD BAR HINGE CONNECTING

BARRIER SYSTEMS
A LINDSAY TRANSPORTATION SOLUTIONS COMPANY

SHEET	DRAWING NUMBER	REV.
1 OF 1	A991208	E

SCOPE OF ACCREDITATION TO ISO/IEC 17025:2005

SAFE TECHNOLOGIES, INC.
170 River Road
Rio Vista, CA 94571
Joseph Nagy Phone: 707 378 4221

MECHANICAL

Valid To: March 31, 2018 Certificate Number: 1851.01

In recognition of the successful completion of the A2LA evaluation process, accreditation is granted to this laboratory to perform the following full scale crash tests of Roadside Safety Devices:

Test	Method
Full Scale Crash Testing (In support of FHWA Certification) (Up to 2000P test vehicle)	National Cooperative Highway Research Program – Report 350 Recommended Procedures for the Safety Performance Evaluation of Highway Features
Full Scale Crash Testing (In support of FHWA Certification) (Up to 2270P test vehicle)	MASH – American Association of State Highway and Transportation Officials – Manual for Assessing Safety Hardware, 2009
Full Scale Crash Testing (In support of International Certification) (Up to 1500P test vehicle)	European CEN Standard EN-1317 Parts 1-5, 7

5202 Presidents Court, Suite 220 | Frederick, MD 21703-8398 | Phone: 301 644 3248 | Fax: 240 454 9449 | www.A2LA.org