STF1008

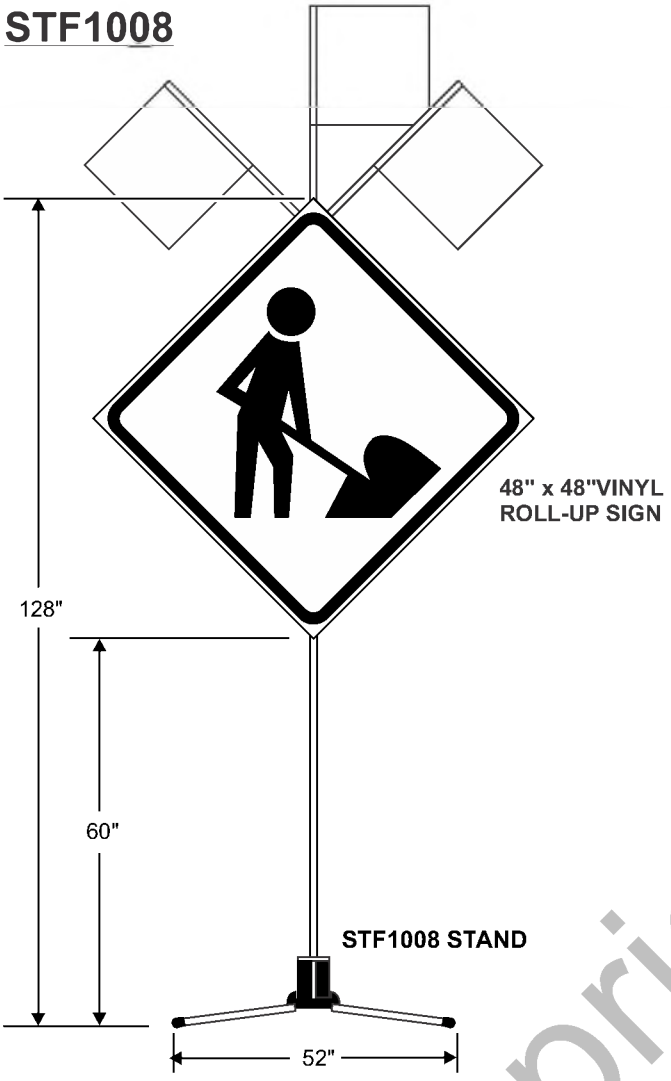

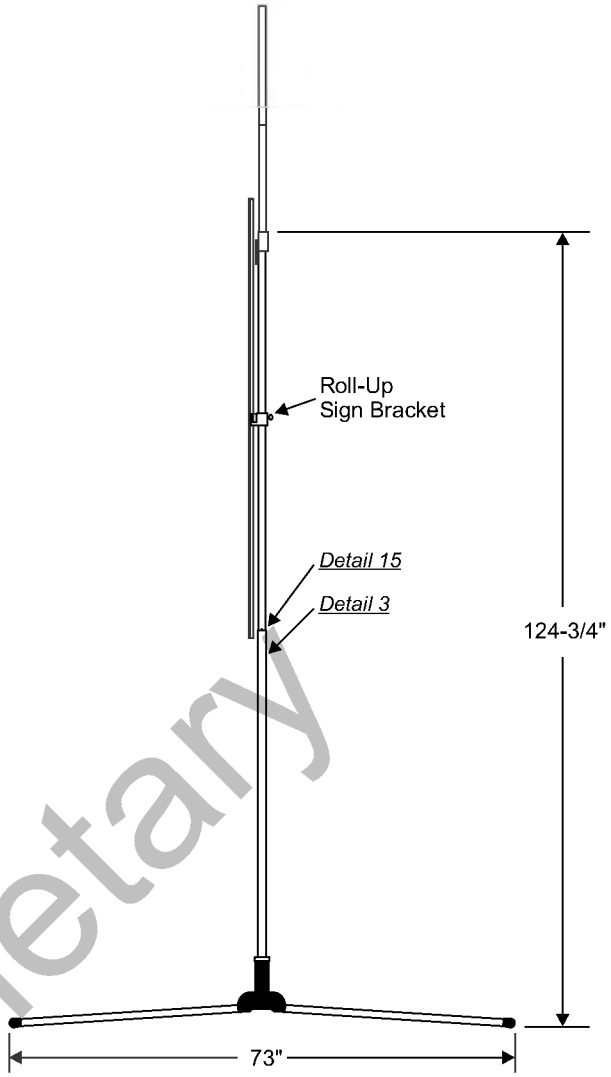

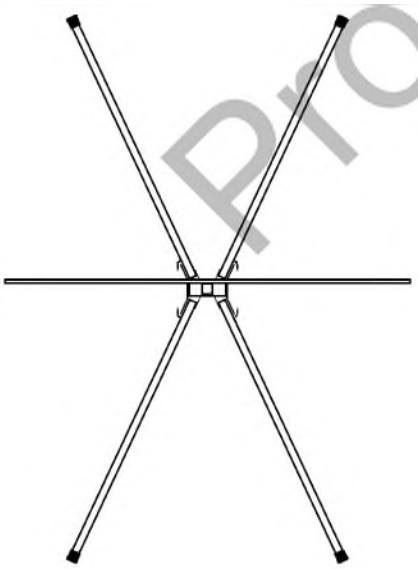

Proprietary

STF1008

- Base- Steel with heavy duty dual upright spring system
- Mast- Telescoping 1-1/4" sq. steel and 1" sq. aluminum tubing
- Legs- 1-1/4" sq. steel tubing

VINYL ROLL-UP SIGN

- Panel- Reflective vinyl, 48" x 48"
- Crossbrace- Vertical member is 1-1/4" w x 65" long fiberglass
- Crossbrace - Horiz. member is x 1-1/4"w x 65" long fiberglass

FLAGS

- 18" x 18" vinyl with 3/4" round x 24" long staff

Weight: STF1008

Sign, Crossbrace, Flags	6.4 lbs.
Sign Stand	40.5 lbs.
Total	46.9 lbs.

DICKE Since 1886

DICKE SAFETY PRODUCTS

www.dicketool.com

Illinois - 1201 Warren Avenue • Downers Grove, IL 60515 • Ph: 630.969.0050 • Fax: 630.969.3973
Oregon - 1845 Anunsen Street, N.E. • Salem, OR 97301 • Ph: 800.333.5641 • Fax: 503.364.0340