STATE	PROJECT	SHEET NUMBER
WA	JEFF 91420(1)	A.1

U. S. DEPARTMENT OF TRANSPORTATION
FEDERAL HIGHWAY ADMINISTRATION

Project Location

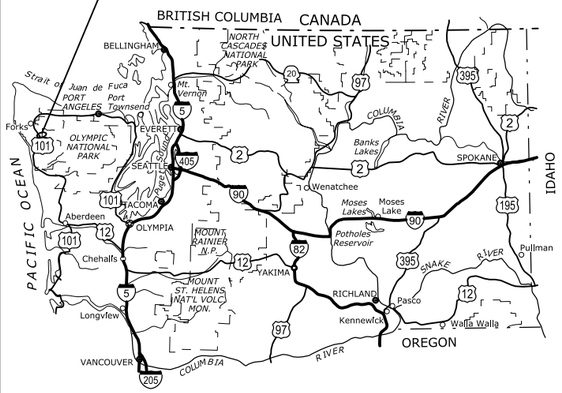

WASHINGTON KEY MAP

PLANS FOR PROPOSED PROJECT

WA JEFF 91420(1)

UPPER HOH RIVER ROAD PHASE 2

OLYMPIC NATIONAL PARK
JEFFERSON COUNTY
WASHINGTON

LENGTH 1.047 MILES

TYPE OF CONSTRUCTION:

Bridge construction, AOP pipe and Bank stabilization

DESIGN DESIGNATION:

ADT (2005)	*600*
ADT (YR+20)	*750*
V	*35 MPH*
e (max)	*0.060*

SPECIFICATION:

Standard Specifications for Construction of Roads and Bridges on Federal Highway Projects, FP-14 US Customary Units

FEDERAL LANDS HIGHWAY
COMMITMENT TO EXCELLENCE

PLANS PREPARED BY

U.S. DEPARTMENT OF TRANSPORTATION
FEDERAL HIGHWAY ADMINISTRATION
WESTERN FEDERAL LANDS HIGHWAY DIVISION
VANCOUVER, WASHINGTON

PROJECT MANAGER
K. Loftsgaarden

PROJECT LOCATIONS
See Sheet A.4 for Vicinity Map

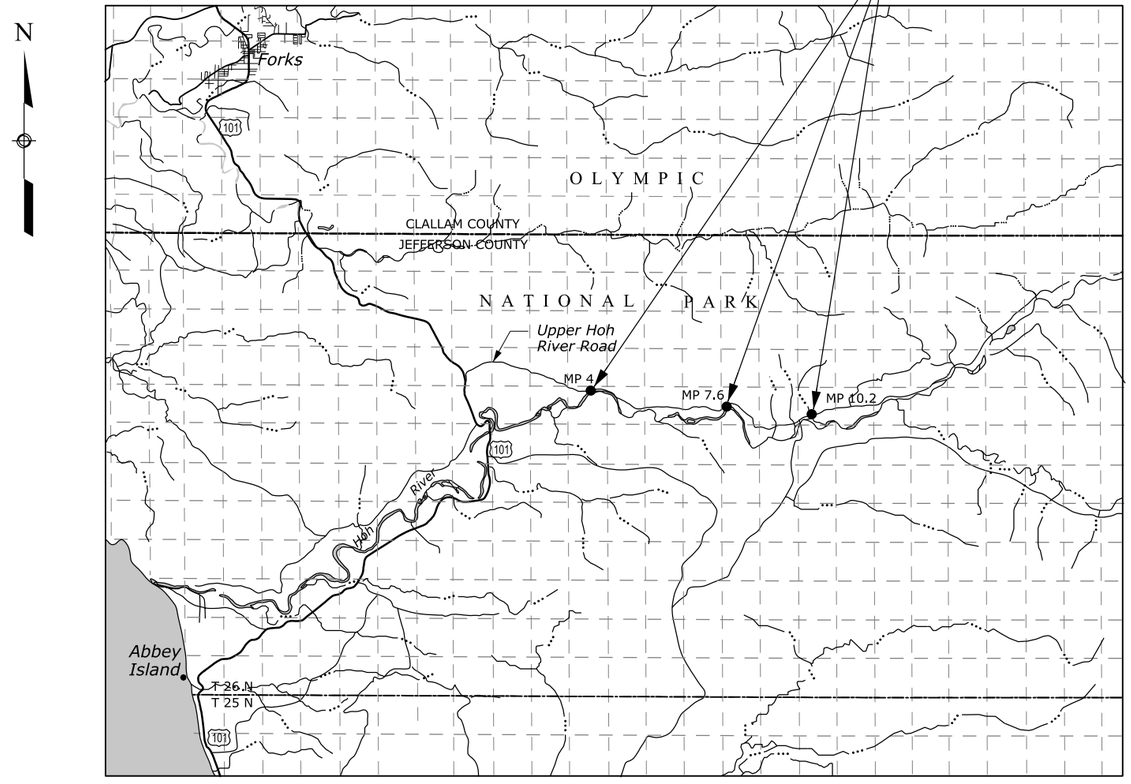

SCALE IN MILES
1 0 1 2 3

SECTION INDEX

A. GENERAL INFORMATION
B. SUMMARY OF QUANTITIES
C. TYPICAL SECTIONS
D. PLAN-PROFILE
E. APPROACH ROADS AND PARKING AREAS
F. SOIL EROSION AND SEDIMENT CONTROL
G. BRIDGE
H. DRAINAGE
I. ROADSIDE FEATURES
J. ROCKERY AND SPECIAL ROCK EMBANKMENT
K. TEMPORARY TRAFFIC CONTROL PLAN
L. PERMANENT TRAFFIC CONTROL PLAN

APPROVED:

_____ DATE _____

Director, Project Delivery,
Western Federal Lands Highway Division

70% PLAN IN HAND 04-18-2017

--/---
Designed by: C. Conrad
Checked by: 04/2017
c:\myfiles\pw_production\d0203226\wa-a2013020-aa.dgn [US_Sur_ft2D]
18 April 2017 6:51 AM

STATE	PROJECT	SHEET NUMBER
WA	JEFF 91420(1)	A.2

INDEX TO SHEETS

A. GENERAL INFORMATION
A.1 TITLE SHEET
A.2 INDEX TO SHEETS
A.3 PLAN SYMBOLS AND ABBREVIATIONS
A.4 VICINITY MAP

B. SUMMARY OF QUANTITIES
B.1-3 SUMMARY OF QUANTITIES

C. TYPICAL SECTIONS
C.1 TYPICAL SECTION

D. PLAN-PROFILE
D.1 TABULATION OF PLAN AND PROFILE QUANTITIES
D.2-9 PLAN AND PROFILE

E. APPROACH ROADS AND PARKING AREAS
E.1 APPROACH ROAD TYPICAL SECTION
E.2-3 APPROACH ROAD PLAN AND PROFILE

F. SOIL EROSION AND SEDIMENT CONTROL
F.1-2 TABULATION OF EROSION/SEDIMENT CONTROL QUANTITIES
F.3-8 EROSION/SEDIMENT CONTROL PLAN
F.9-15 STANDARD DRAWINGS AND DETAILS

G. BRIDGE
G.1 TOWER CREEK BRIDGE PLAN AND ELEVATION
G.2 TOWER CREEK BRIDGE GENERAL NOTES
G.3-18 TOWER CREEK BRIDGE DETAILS
G.19 CANYON CREEK BRIDGE PLAN AND ELEVATION
G.20 CANYON CREEK BRIDGE GENERAL NOTES
G.21-36 CANYON CREEK BRIDGE DETAILS

H. DRAINAGE
H.1-3 TABULATION OF MITIGATION, BANK STABILIZATION
H.4 TABULATION OF MP 4.0 AOP CULVERT QUANTITIES
H.5-10 DRAINAGE PLAN AND PROFILE
H.11 BANK STABLILIZATION WOOD BUFFER w/ DOLOSSE DETAILS
H.12 CHANNEL PLUG DETAILS
H.13 GRAVEL-COBBLE BANK STABILIZATION TYPICAL SECTIONS
H.14-18 MP 4.0 AOP CULVERT DETAILS
H.19 TOWER CREEK BRIDGE PLAN AND PROFILE
H.20 CANYON CREEK BRIDGE PLAN AND PROFILE

I. ROADSIDE FEATURES
I.1 ROADSIDE TABULATION OF QUANTITIES
I.2 BRIDGE APPROACH RAILING DETAILS
I.3-7 GUARDRAIL STANDARD DRAWINGS

J. ROCKERY AND SPECIAL ROCK EMBANKMENT
J.1 TABULATION OF ROCKERY AND SPECIAL ROCK EMBANKMENT QUANTITIES QUANTITIES
J.2 SPECIAL ROCK EMBANKMENT MECHANICALLY PLACED
J.3 ROCKERY WALL PLAN AND PROFILE
J.4 ROCKERY WALL DETAILS

K. TEMPORARY TRAFFIC CONTROL PLAN
K.1 TABULATION OF TEMPORARY TRAFFIC CONTROL QUANTITIES
K.2-9 TEMPORARY TRAFFIC CONTROL STANDARD DETAILS

L. PERMANENT TRAFFIC CONTROL PLAN
L.1 TABULATION OF PERMANENT TRAFFIC CONTROL QUANTITIES
L.2-4 PERMANENT TRAFFIC CONTROL LAYOUT PLANS
L.5-7 PERMANENT TRAFFIC CONTROL STANDARD DETAILS

INDEX TO SHEETS

70% PLAN IN HAND 04-18-2017
Designed by: --/---
Checked by: --/---
18 April 2017 6:47 AM c:\myfiles\pw_production\d0203226\wa-a2013020-ab.dgn [US_Sur_ft2D]

STATE	PROJECT	SHEET NUMBER
WA	JEFF 91420(1)	A.3

Δ	total central angle
Δc	curve central angle
Ø	diameter
θs	spiral central angle
abut.	abutment
ADT	average daily traffic
AH	ahead
appr.	approach
BK	back
BM	bench mark
BP	balance point
br.	bridge
brg.	bearing
cc or c. to c.	center to center
℄	centerline
clr.	clear
CMP	corrugated metal pipe
col.	column
conc.	concrete
conn.	connection
constr. jt.	construction joint
cont.	continuous
CS	point of curve to spiral
ctrs.	centers
CUFT	cubic foot (feet)
culv.	culvert
CUYD	cubic yard(s)
D	diameter
DHV	design hourly volume
dia.	diameter
diag.	diagonal
diaph.	diaphragm
dist.	distance
drwg(s).	drawing(s)
E	east
e	superelevation rate
El. 94.16 ft	elevation with number
elev.	elevation
emb.	embankment
EP	edge of pavement
EQ or eq.	equation
ER	edge of road
EW	edge of water
exc.	excavation
exp. jt.	expansion joint
fin.	finish
flg.	flange
ft2	square foot
ft3	cubic foot (feet)
ftg.	footing
ga.	gage (gauge)
galv.	galvanized
hdwl.	headwall
hex.	hexagon
HW	high water
ID	inside diameter
jt.	joint
L	length of curve
lam.	lamination
lat.	latitude
LNFT	linear foot (feet)
long.	longitudinal
LPSM	lump sum
Ls	length of spiral
lt. or LT	left
LW	low water

M.L.	main line
M.P.	mile post
matl.	material
max.	maximum
MGAL	thousand gallon
min.	minimum
mon.	monument
N	north
NC	normal crown
o. c.	on center
o. to o.	out to out
OD	outside diameter
OG	original ground
PC	point of curve
PCC	point of compound curve
PCS	point of curve to spiral
PI	point of intersection
pl.	plate
POC	point on curve
POS	point on spiral
POT	point on tangent
PS	point of tangent to spiral
PSC	point of spiral to curve
PST	point of spiral to tangent
PT	point of tangent
pvmt.	pavement
R	radius
R.	range
R/W	right-of-way
rdwy.	roadway
reinf.	reinforcement
reqd.	required
rt. or RT	right
rte.	route
S	south
SADT	seasonal average daily traffic
SC	point of spiral to curve
sec.	section
shldr.	shoulder
SLRY	slurry unit
spa.	spacing, spaces or spaced
SQFT	square foot
SQYD	square yard
SRS	point of spiral to reverse spiral
SS	point of spiral to spiral (no curve)
ST	point of spiral to tangent
STA, Sta.	station
std.	standard
stgr.	stringer
stiff.	stiffener
struc.	structural
STS	point of spiral to tangent spiral
sym.	symmetrical
T	tangent distance
T.	township
TBM	temporary bench mark
thd.	thread
TS	point of tangent to spiral
Ts	tangent distance (spiraled curve)
typ.	typical
V	design speed
vph	vehicles per hour
VPI	vertical point of intersection
W	west
yd2	square yard
yd3	cubic yard(s)

NOTE:

1. Other symbols used in the plans will be shown in a legend on the appropriate plan sheet.

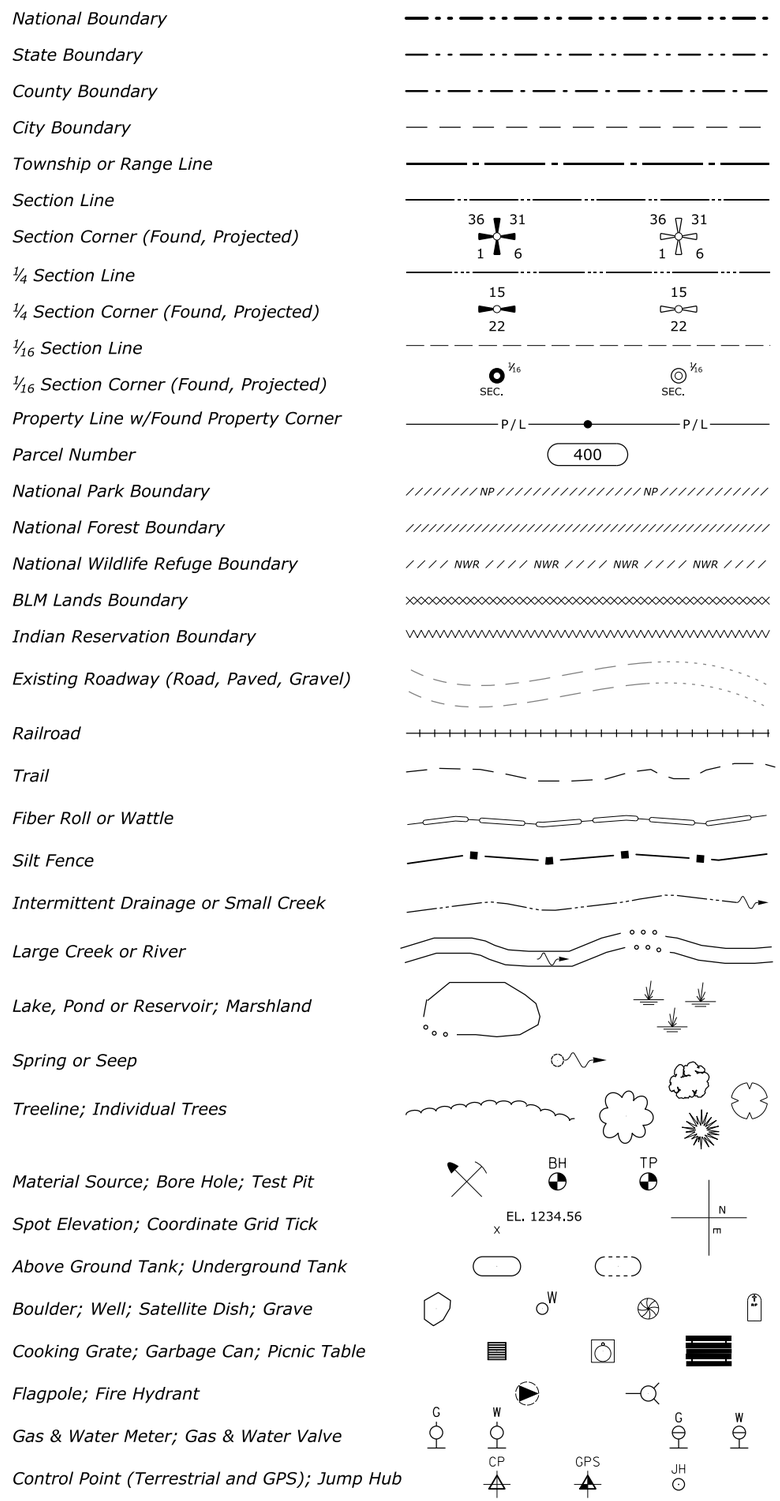

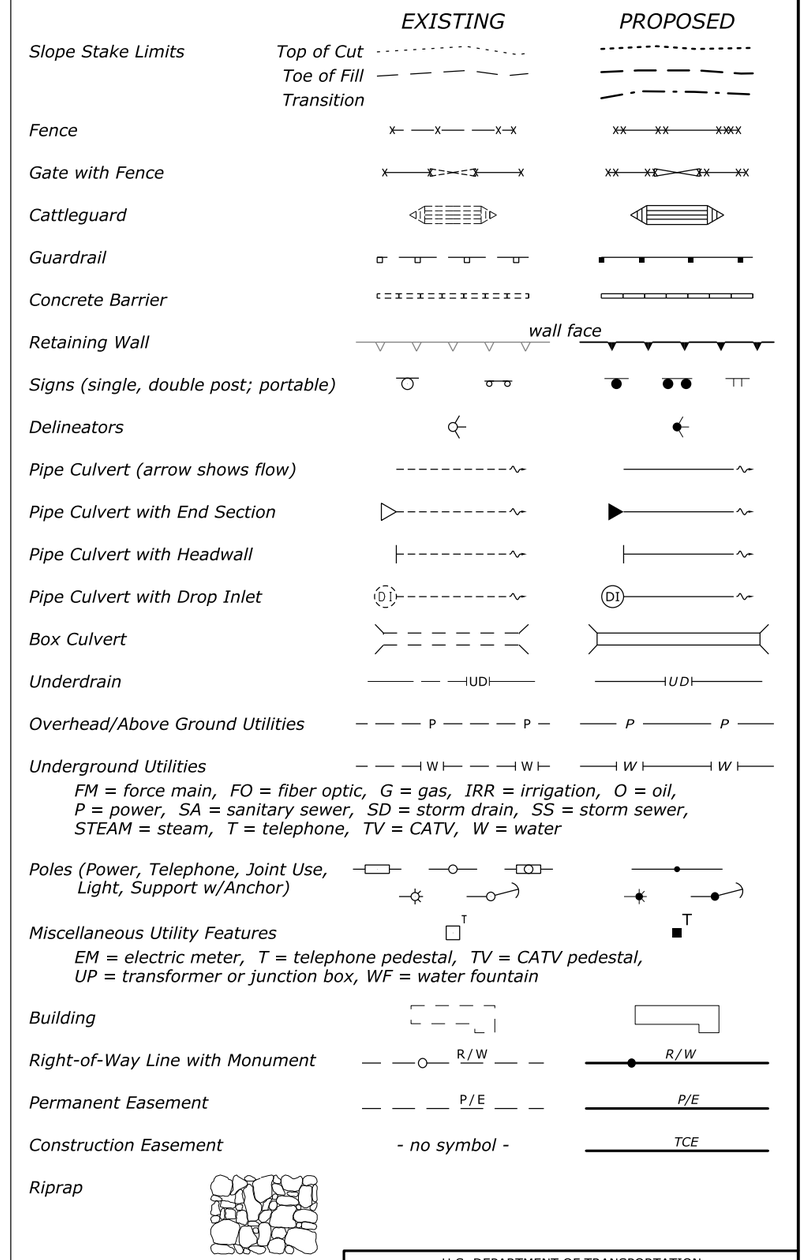

NO SCALE

U.S. DEPARTMENT OF TRANSPORTATION
FEDERAL HIGHWAY ADMINISTRATION
WESTERN FEDERAL LANDS HIGHWAY DIVISION

U.S. CUSTOMARY DETAIL

PLAN SYMBOLS AND ABBREVIATIONS

DETAIL APPROVED FOR USE 11/2001

REVISED: 9/2005 1/2007 10/2009 10/2014

DETAIL W101-1

70% PLAN IN HAND 04-18-2017

c:\myfiles\pw_production\d0203226\wa-a2013020_ab_Det.W101-1.dgn [USC]

5 April 2017 3:21 PM

STATE	PROJECT	SHEET NUMBER
WA	JEFF 91420(1)	A.4

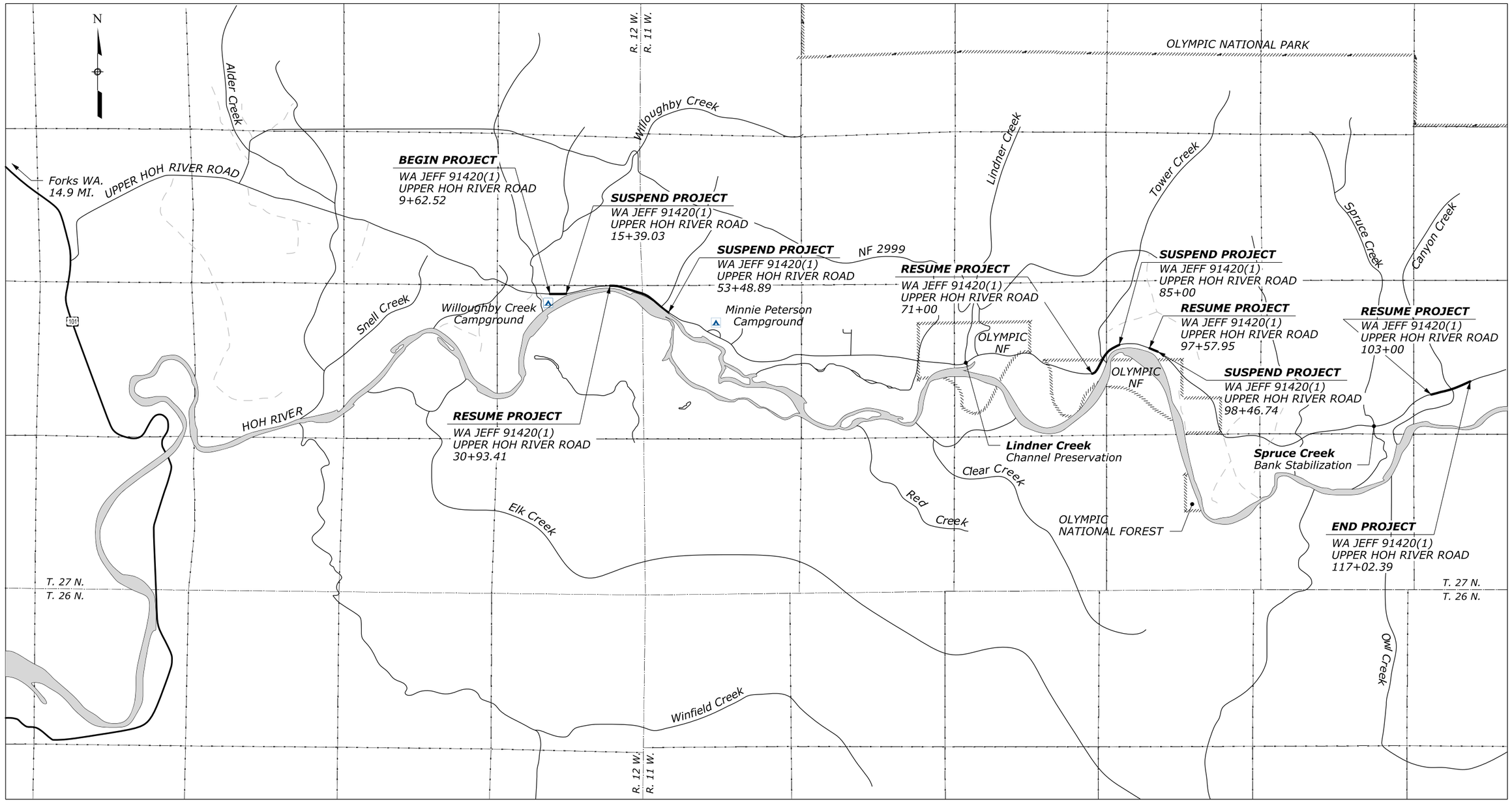

Scale in Miles

0 .5 1

VICINITY MAP

70% PLAN IN HAND 04-18-2017

Designed by: --/---- Checked by: --/---- --/----

c:\myfiles\pw_production\d0203226\WA-a2013020_ac.dgn [US_Sur_ft2D]

13 April 2017 8:50 AM

STATE	PROJECT	SHEET NUMBER
WA	JEFF 91420(1)	B.1

SUMMARY OF QUANTITIES - Schedule A

AMEND	Line Item No.	Pay Item Number	Pay Item Description	Unit	Sheet and Description: Section C Typical Section	Section D Plan & Profile	Section E Approach Roads	Section F Sediment/ Erosion Control	Section G Bridge	Section H Drainage	Section I Roadsde Features	Section J Rockery and Special Rock Embankment	Section K Temporary Traffic Control	Section L Permanent Traffic Control	ALLOWANCE	Estimated Quantities: Bid Schedule	Remarks and/or Determination of Estimated Quantity
	A0020	15101-0000	MOBILIZATION	LPSM												ALL	
	A0040	15201-0000	CONSTRUCTION SURVEY AND STAKING	LPSM												ALL	
	A0060	15215-4000	SURVEY AND STAKING, PERMANENT MONUMENT AND MARKER(PROPERTY CORNER)	EACH		1										1	
	A0080	15301-0000	CONTRACTOR QUALITY CONTROL	LPSM												ALL	
	A0100	15401-0000	CONTRACTOR TESTING	LPSM												ALL	
	A0120	15501-0000	CONSTRUCTION SCHEDULE	LPSM												ALL	
	A0140	15702-1000	SOIL EROSION CONTROL, TEMPORARY DIVERSION CHANNEL	LPSM												ALL	
	A0160	15705-0100	SOIL EROSION CONTROL, SILT FENCE	LNFT				3,795							305	4,100	
	A0180	15706-0200	SOIL EROSION CONTROL, CHECK DAM (FILTER ROCK)	EACH				29							3	32	
	A0200	15706-0200	SOIL EROSION CONTROL, CHECK DAM (FILTER ROCK)	EACH				49							5	54	
	A0220	20101-0000	CLEARING AND GRUBBING	ACRE	5.0											5.0	
	A0240	20220-1000	REMOVAL, INDIVIDUAL TREE	EACH		1										1	
	A0260	20301-0300	REMOVAL OF BOX CULVERT	EACH		1										1	
	A0280	20301-1100	REMOVAL OF GATE	EACH		1										1	
	A0300	20301-1900	REMOVAL OF PIPE CULVERT (60 - INCH DIA. CMP)	EACH		1										1	
	A0320	20301-1900	REMOVAL OF PIPE CULVERT (18 - INCH DIA. CMP)	EACH		1										1	
	A0340	20301-2400	REMOVAL OF SIGN	EACH		8										8	
	A0360	20302-1200	REMOVAL OF GUARDRAIL	LNFT		229										229	
	A0380	20304-2000	REMOVAL OF BRIDGE	LPSM					ALL							ALL	
	A0400	20401-0000	ROADWAY EXCAVATION	CUYD		12,970	522					148			1,360	15,000	
	A0420	20701-0300	SEPARATION-STABILIZATION GEOTEXTILE, CLASS 1, TYPE C	SQYD						100					10	110	
	A0440	20702-0100	GEOTEXTILE FILTER, CLASS 1, TYPE A	SQYD								144			16	160	
	A0460	20801-0000	STRUCTURE EXCAVATION	CUYD					85							85	
	A0480	20803-0000	STRUCTURAL BACKFILL	CUYD					585							585	
	A0500	20810-0000	SHORING AND BRACING	LPSM												ALL	
	A0520	21101-1000	ROADWAY OBLITERATION, METHOD 1	SQYD		2,770									270	3,040	
	A0540	25101-0300	PLACED RIPRAP, METHOD A, CLASS 3	CUYD						100					10	110	
	A0560	25201-1000	SPECIAL ROCK EMBANKMENT, MECHANICALLY-PLACED	CUYD								161			9	170	
	A0580	25210-0000	ROCKERY	SQFT								96			9	105	
	A0600	30110-0000	AGGREGATE SURFACE COURSE	TON									185		15	200	
	A0620	30202-1000	ROADWAY AGGREGATE, METHOD 1	TON	5,460		314								576	6,350	

70% PLAN IN HAND 04-18-2017

c:\myfiles\pw_production\d02032341\wa-a2013020-Estimate-14.xlsx]Sheet

18-Apr-2017 5:04 PM

STATE	PROJECT	SHEET NUMBER
WA	JEFF 91420(1)	B.2

SUMMARY OF QUANTITIES - Schedule A

AMEND	Line Item No.	Pay Item Number	Pay Item Description	Unit	Sheet and Description: Section C Typical Section	Section D Plan & Profile	Section E Approach Roads	Section F Sediment/ Erosion Control	Section G Bridge	Section H Drainage	Section I Roadsde Features	Section J Rockery and Special Rock Embankment	Section K Temporary Traffic Control	Section L Permanent Traffic Control	ALLOWANCE	Estimated Quantities: Bid Schedule	Remarks and/or Determination of Estimated Quantity
	A0640	40301-0100	ASPHALT CONCRETE PAVEMENT, TYPE 1	TON	1,771				90						129	1,990	
	A0660	41201-0000	TACK COAT	TON	9										1	10	
	A0680	55101-0200	CONCRETE FILLED STEEL PIPE PILE, IN PLACE(24-INCH DIAMETER X 0.75=INCH)	LNFT					1,635							1,635	
	A0700	55104-1000	DYNAMIC PILE LOAD TEST	EACH					4							4	
	A0720	55201-0200	STRUCTURAL CONCRETE, CLASS A (AE)	CUYD					90							90	
	A0740	55201-0800	STRUCTURAL CONCRETE, CLASS D (AE)	CUYD					80							80	
	A0760	55202-2000	STRUCTURAL CONCRETE, CLASS D (AE), FOR APPROACH SLABS, TYPE 2	SQYD					110							110	
	A0780	55302-2700	PRECAST, PRESTRESSED CONCRETE DECKED BULB TEE GIRDERS, 53-INCH	LNFT					1,190							1,190	
	A0800	55401-1000	REINFORCING STEEL	LB					12,600							12,600	
	A0820	55401-2000	REINFORCING STEEL, EPOXY COATED	LB					7,000							7,000	
	A0840	55601-1100	BRIDGE RAILING, STEEL, TWO RAIL	LNFT					712							712	
	A0860	55901-0000	MEMBRANE WATERPROOFING	SQYD					700							700	
	A0880	56401-1000	BEARING DEVICE, ELASTOMERIC	EACH					20							20	
	A0900	60220-0000	PRECAST REINFORCED CONCRETE BOX CULVERT (16-FT SPAN x 16-FT RISE)	LNFT						40						40	
	A0920	61701-2000	GUARDRAIL SYSTEM G4, TYPE 4, CLASS B WOOD POSTS	LNFT							175					175	
	A0940	61702-0300	TERMINAL SECTION, TYPE G4-BAT	EACH							2					2	
	A0960	61702-0800	TERMINAL SECTION TYPE TANGENT	EACH							10					10	
	A0980	61707-0000	STRUCTURE TRANSITION RAILING	LNFT							104					104	
	A1000	62502-0000	TURF ESTABLISHMENT	SQYD				8,929							871	9,800	
	A1020	62632-0000	PLANTINGS(POLE PLANTINGS)	LPSM												ALL	
	A1040	62632-0000	PLANTINGS(LINDNER CREEK POLE PLANTINGS)	LPSM												ALL	
	A1060	62632-0000	PLANTINGS(SPRUCE CREEK POLE PLANTINGS)	LPSM												ALL	
	A1080	62901-0000	ROLLED EROSION CONTROL PRODUCT	SQYD				8,929							871	9,800	
	A1100	63302-0000	SIGN SYSTEM	SQFT										49		49	
	A1120	63401-0300	PAVEMENT MARKINGS, TYPE B, SOLID (YELLOW)	LNFT										12,404	1,196	13,600	
	A1140	63502-0600	TEMPORARY TRAFFIC CONTROL, BARRICADE TYPE 3	EACH									12			12	
	A1160	63502-1000	TEMPORARY TRAFFIC CONTROL, CONE, TYPE 36-INCH	EACH									107			107	
	A1180	63502-1300	TEMPORARY TRAFFIC CONTROL, DRUM	EACH									12			12	

70% PLAN IN HAND 04-18-2017

c:\myfiles\pw_production\d0203234\[wa-a2013020-Estimate-14.xlsx]Sheet (2)

18-Apr-2017 5:04 PM

SUMMARY OF QUANTITIES - Schedule A

STATE	PROJECT	SHEET NUMBER
WA	JEFF 91420(1)	B.3

AMEND	Line Item No.	Pay Item Number	Pay Item Description	Unit	Sheet and Description: Section C Typical Section	Section D Plan & Profile	Section E Approach Roads	Section F Sediment/ Erosion Control	Section G Bridge	Section H Drainage	Section I Roadsde Features	Section J Rockery and Special Rock Embankment	Section K Temporary Traffic Control	Section L Permanent Traffic Control	ALLOWANCE	Estimated Quantities: Bid Schedule	Remarks and/or Determination of Estimated Quantity
	A1200	63502-1600	TEMPORARY TRAFFIC CONTROL, WARNING LIGHT TYPE B	EACH									12			12	
	A1220	63502-2000	TEMPORARY TRAFFIC CONTROL, PORTABLE CHANGEABLE MESSAGE SIGN	EACH									2			2	
	A1240	63502-2100	TEMPORARY TRAFFIC CONTROL, CRASH CUSHION	EACH									6			6	
	A1260	63502-3100	TEMPORARY TRAFFIC CONTROL, TRAFFIC SIGNAL SYSTEM	EACH									3			3	
	A1280	63503-0400	TEMPORARY TRAFFIC CONTROL, CONCRETE BARRIER	LNFT									5,990			5,990	
	A1300	63504-1000	TEMPORARY TRAFFIC CONTROL, CONSTRUCTION SIGN	SQFT									449			449	
	A1320	63504-2000	TEMPORARY TRAFFIC CONTROL, PAVEMENT MARKINGS, SYMBOLS AND LETTERS (STOP LINE)	SQFT									144			144	
	A1340	63506-0600	TEMPORARY TRAFFIC CONTROL, PILOT CAR	HOUR									3,300			3,300	
	A1360	63507-0700	TEMPORARY TRAFFIC CONTROL, TRAFFIC CONTROL SUPERVISOR	DAY									400			400	
	A1380	63509-1000	TEMPORARY TRAFFIC CONTROL, FLAGGER	FXHR									6,600			6,600	
	A1400	64703-6000	MITIGATION, FISH PASSAGE BOULDER	EACH												0	
	A1420	64703-8000	MITIGATION, BANK STABILIZATION(KEY DOLOSE)	EACH						186						186	
	A1440	64703-8000	MITIGATION, BANK STABILIZATION(WOOD BUFFER w/ DOLOSSE)	EACH						31						31	
	A1460	64703-8000	MITIGATION, BANK STABILIZATION(LINDNER CREEK WOOD BUFFER w/ DOLOSSE)	EACH						24						24	
	A1480	64703-8000	MITIGATION, BANK STABILIZATION(SPRUCE CREEK KEY DOLOSE)	EACH						6						6	
	A1500	64703-8000	MITIGATION, BANK STABILIZATION(SPRUCE CREEK WOOD BUFFER w/ DOLOSSE)	EACH						1						1	
	A1520	64704-1000	MITIGATION, STREAMBED MATERIAL(CONSERVED)	CUYD						3,900					400	4,300	
	A1540	64704-1000	MITIGATION, STREAMBED MATERIAL	CUYD												0	
	A1560	64704-1700	MITIGATION, BANK STABILIZATION(COARSE WOODY DEBRIS)	CUYD						9,300						9,300	

70% PLAN IN HAND 04-18-2017

c:\myfiles\pw_production\d0203234\{wa-a2013020-Estimate-14.xlsx}Sheet (3)

18-Apr-2017 5:04 PM

STATE	PROJECT	SHEET NUMBER
WA	JEFF 91420(1)	B.4

SUMMARY OF QUANTITIES - Schedule A

AMEND	Line Item No.	Pay Item Number	Pay Item Description	Unit	Sheet and Description: Section C Typical Section	Section D Plan & Profile	Section E Approach Roads	Section F Sediment/ Erosion Control	Section G Bridge	Section H Drainage	Section I Roadsde Features	Section J Rockery and Special Rock Embankment	Section K Temporary Traffic Control	Section L Permanent Traffic Control	ALLOWANCE	Estimated Quantities: Bid Schedule	Remarks and/or Determination of Estimated Quantity
	A1580	64704-1700	MITIGATION, BANK STABILIZATION(LINDNER CREEK COARSE WOODY DEBRIS)	CUYD						2,880						2,880	
	A1600	64704-1700	MITIGATION, BANK STABILIZATION(SPRUCE CREEK COARSE WOODY DEBRIS)	CUYD						300						300	
	A1620	65001-1000	CONSTRUCT AND MAINTAIN DIVERSION(FLOW DIVERSION)	LPSM												ALL	
	A1640	65001-1000	CONSTRUCT AND MAINTAIN DIVERSION(LINDNER CREEK FLOW DIVERSION)	LPSM												ALL	
	A1660	65001-1000	CONSTRUCT AND MAINTAIN DIVERSION(SPRUCE CREEK FLOW DIVERSION)	LPSM												ALL	
	A1680	99920-0000	DESIGN CONTINGENCY	LPSM												ALL	

70% PLAN IN HAND 04-18-2017

STATE	PROJECT	SHEET NUMBER
WA	JEFF 91420(1)	C.1

TYPICAL SECTION QUANTITIES[3]

ITEM NUMBER	DESCRIPTION	QUANTITY			ROUNDED TOTAL	UNIT	NOTE
		MP 4	MP 7.6	MP 10			
20101-0000	CLEARING AND GRUBBING	0.46	1.76	2.49	**5**	ACRE	
30202-1000	ROADWAY AGGREGATE, METHOD 1	537	2,518	2,405	**5,460**	TON	1.97 TON/CUYD
40301-0100	ASPHALT CONCRETE PAVEMENT, TYPE 1	184	827	759	**1,771**	TON	1.94 TON/CUYD
41201-1000	TACK COAT	1.7	3.5	3.6	**9**	TON	0.10 GAL/SQYD, 240 GAL/TON

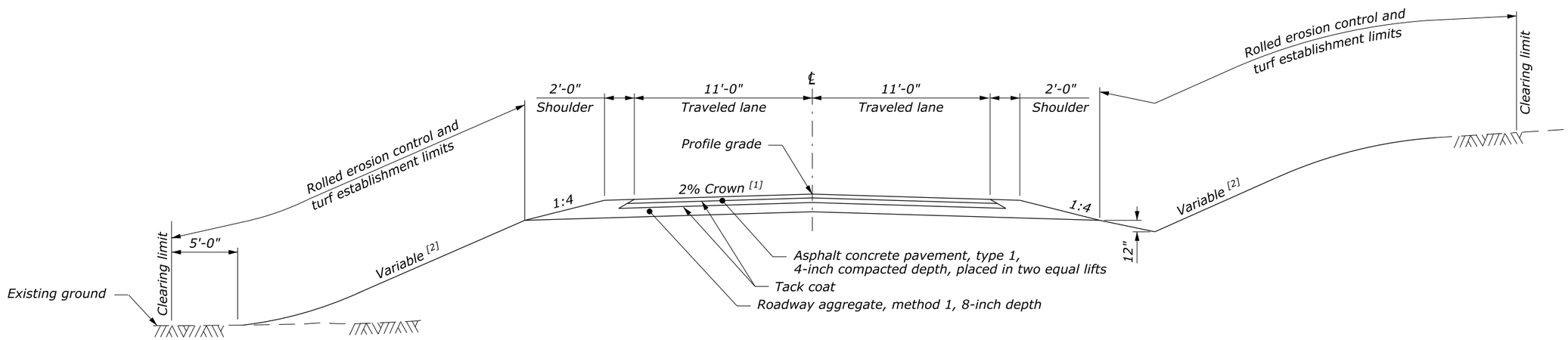

MAINLINE TYPICAL SECTION
47+81.15 to 50+79.67
71+00 to 85+00
103+00 to 117+02.39

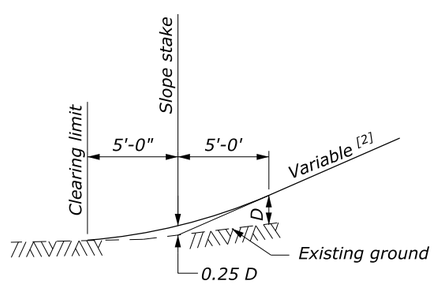

FILL SLOPE [4]
ROUNDING DETAIL

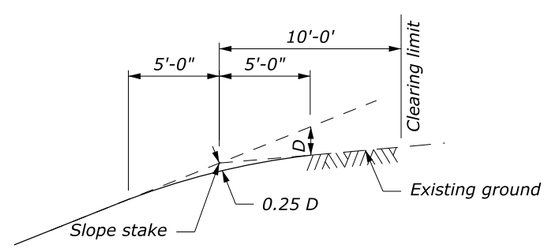

CUT SLOPE [4]
ROUNDING DETAIL

FOOTNOTE:

[1] Superelevate roadway on curves at the rate 'e' as indicated on the plan and profile curve data.

[2] Construct slopes as shown in the Staking Report.

[3] Includes quantities for turnouts and guardrail widening. For approach road quantities see Sheet E.1.

[4] For cut heights less than "B" reduce "B" to the cut height dimension and reduce the front slope rounding distance proportionally.

TYPICAL SECTION

70% PLAN IN HAND 04-18-2017

Designed by: C. Conrad 01/2016 Checked by: --/---
18 April 2017 11:49 AM c:\myfiles\pw_production\d0203230\wa-a2013020ca.dgn [US_Sur_ft2D]

STATE	PROJECT	SHEET NUMBER
WA	JEFF 91420(1)	D.1

15215-4000
SURVEY AND STAKING, PERMANENT MONUMENT AND MARKER (PROPERTY CORNER)

LOCATION	QUANTITY (EACH)	REMARK
76+73 Rt	1	TOWER CREEK

20220-1000
REMOVAL, INDIVIDUAL TREE

LOCATION	QUANTITY (EACH)	REMARK
98+35 RT	1	TOWER CREEK

20301-0300
REMOVAL OF BOX CULVERT

LOCATION	QUANTITY (EACH)	REMARK
108+89	1	CANYON CREEK

20301-1100
REMOVAL OF GATE

LOCATION	QUANTITY (EACH)	REMARK
78+36	1	TOWER CREEK

20301-1900
REMOVAL OF PIPE CULVERT (60 - INCH DIA CMP)

LOCATION	QUANTITY (EACH)	REMARK
49+49	1	MP 4

20301-1900
REMOVAL OF PIPE CULVERT (18 - INCH DIA CMP)

LOCATION	QUANTITY (EACH)	REMARK
76+68	1	TOWER CREEK

20301-2400
REMOVAL OF SIGN

LOCATION	QUANTITY (EACH)	REMARK
73+71 RT	1	TOWER CREEK
77+08 RT	2	
77+80 RT	2	
81+68 RT	1	
104+67 RT	1	CANYON CREEK
104+69 LT	1	
TOTAL	**8**	

20302-1200
REMOVAL OF GUARDRAIL

LOCATION	QUANTITY (LNFT)	REMARK
76+55 to 77+08	53	TOWER CREEK
76+55 to 77+10	56	
77+80 to 78+30	50	
77+87 to 78+46	70	
TOTAL	**229**	

ROADWAY QUANTITIES

LOCATION	ITEM 20401-0000 ROADWAY EXCAVATION (CUYD)	EMBANKMENT (CUYD)
MP 4	563	2
TOWER CREEK	5,007	944
CANYON CREEK	7,400	3,527
TOTAL	**12,970**	**4,473**

21101-1000
ROADWAY OBLITERATION, METHOD 1

LOCATION	QUANTITY (SQYD)	REMARK
76+54 to 77+11	166	TOWER CREEK
77+77 to 81+25	794	
106+00 to 110+21	1,810	CANYON CREEK
TOTAL	**2,770**	

TABULATION OF PLAN AND PROFILE QUANTITIES

70% PLAN IN HAND 04-18-2017

Designed by: C. Conrad | 10/2016 | Checked by: --/---

c:\myfiles\pw_production\d0203231\wa-a2013020_fa.dgn [US_Sur_ft2D]

18 April 2017 11:44 AM

STATE	PROJECT	SHEET NUMBER
WA	JEFF 91420 (1)	D.2

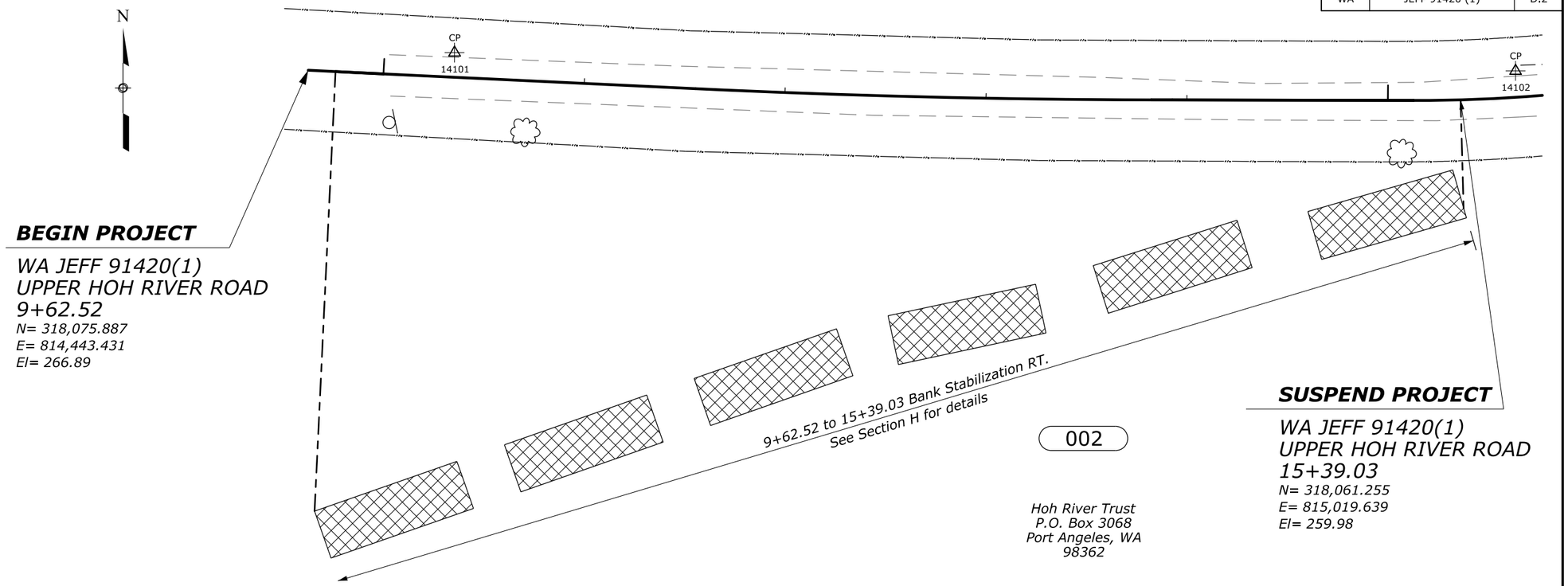

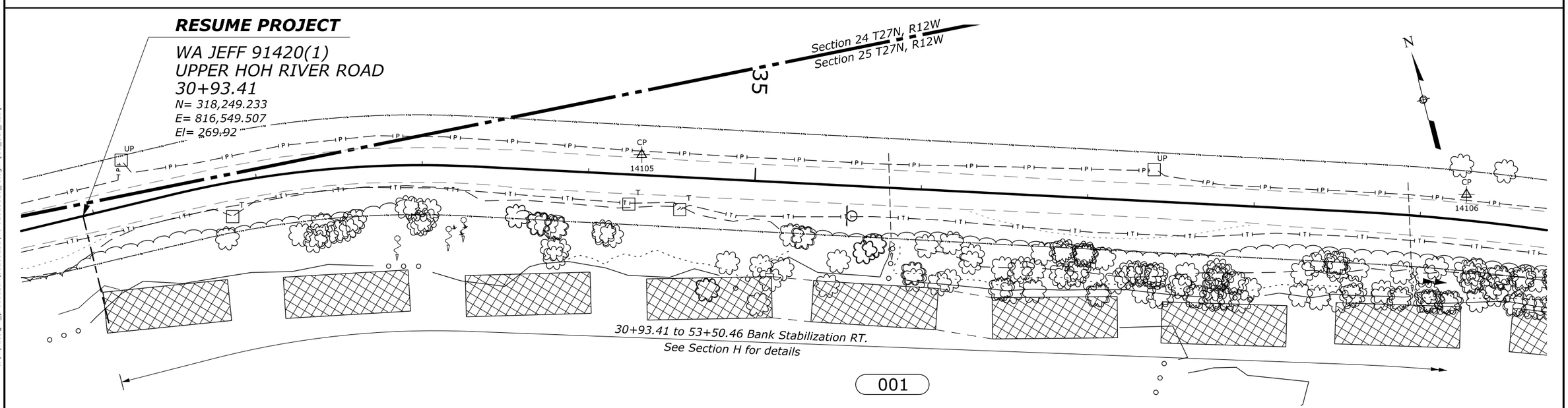

State of Washington
Dept. of Natural Resources
P.O. Box 47014
Olympia, WA
98504-7014

PLAN AND PLAN
9+62.52 TO 39+00

70% PLAN IN HAND 04-18-2017

Designed by: C. Conrad | 10/2016 | Checked by: --/---

c:\mwfiles\pw_production\d0203231\wa-a2013020_fb.dgn [US_Sur_ft2D]

18 April 2017 10:15 AM

STATE	PROJECT	SHEET NUMBER
WA	JEFF 91420 (1)	D.3

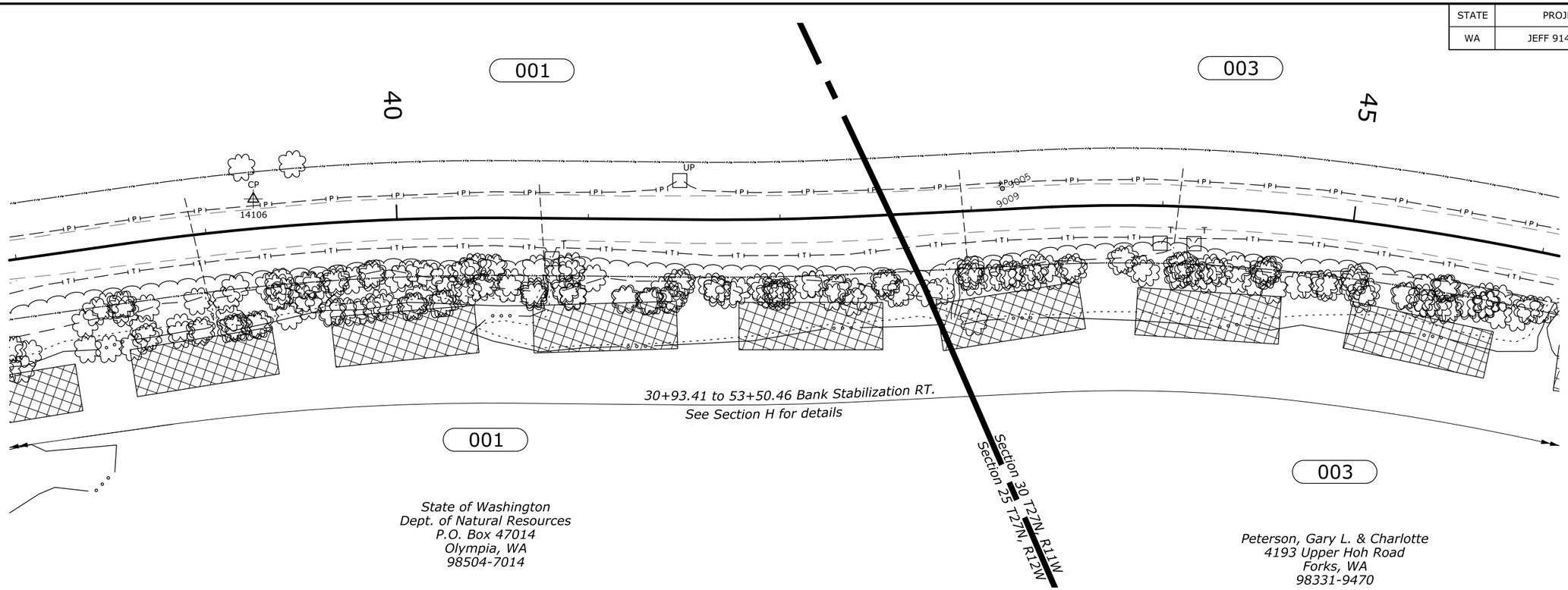

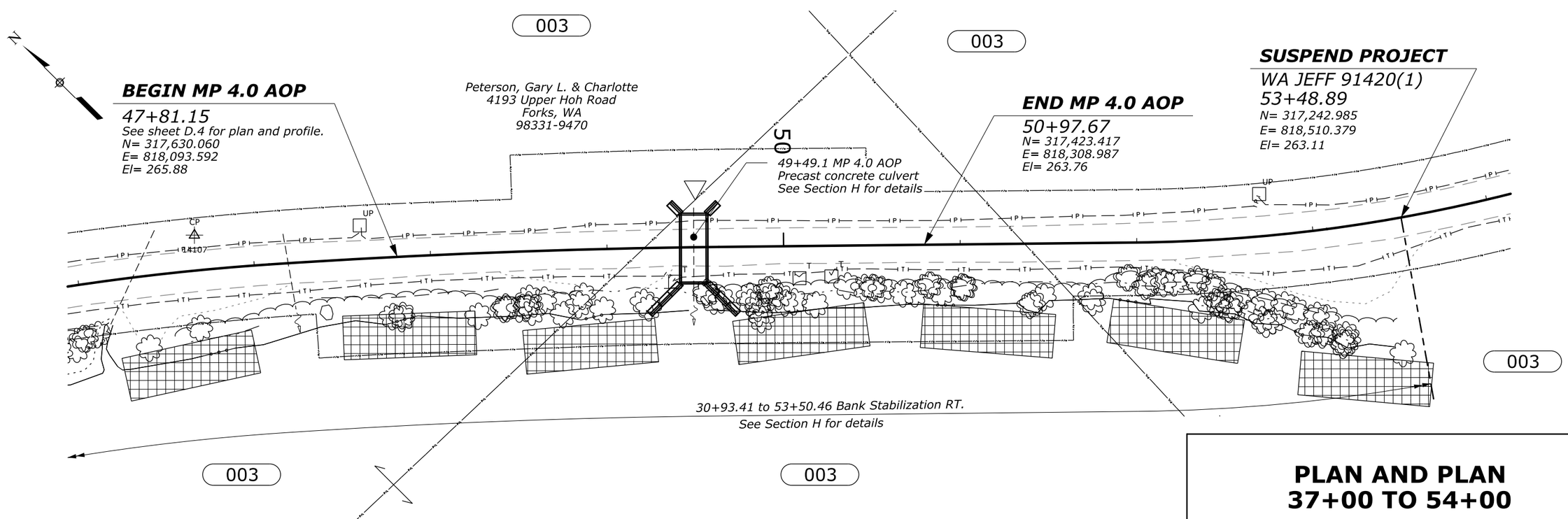

PLAN AND PLAN
37+00 TO 54+00

70% PLAN IN HAND 04-18-2017

Designed by: C. Conrad | 10/2016 | Checked by: --/---

18 April 2017 10:16 AM c:\myfiles\pw_production\d0203231\wa-a2013020_fc.dgn [US_Sur_ft2D]

STATE	PROJECT	SHEET NUMBER
WA	JEFF 91420(1)	D.4

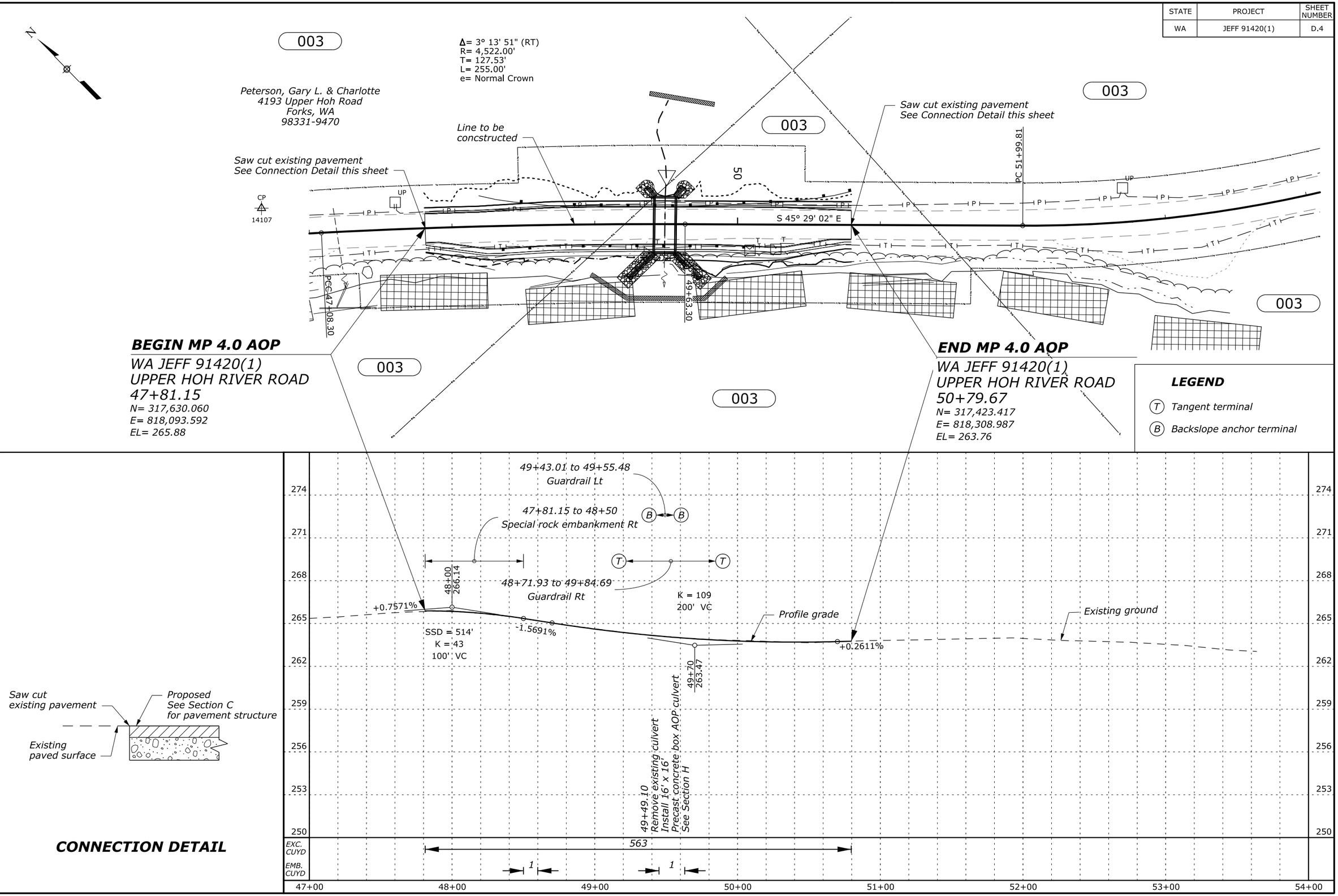

70% PLAN IN HAND 04-18-2017

Designed by: C. Conrad 01/2017 Checked by: --/---

18 April 2017 7:56 AM c:\mvfiles\pw_production\d0203231\wa-a2013020_fd.dgn [Sheet Cell]

STATE	PROJECT	SHEET NUMBER
WA	JEFF 91420(1)	D.5

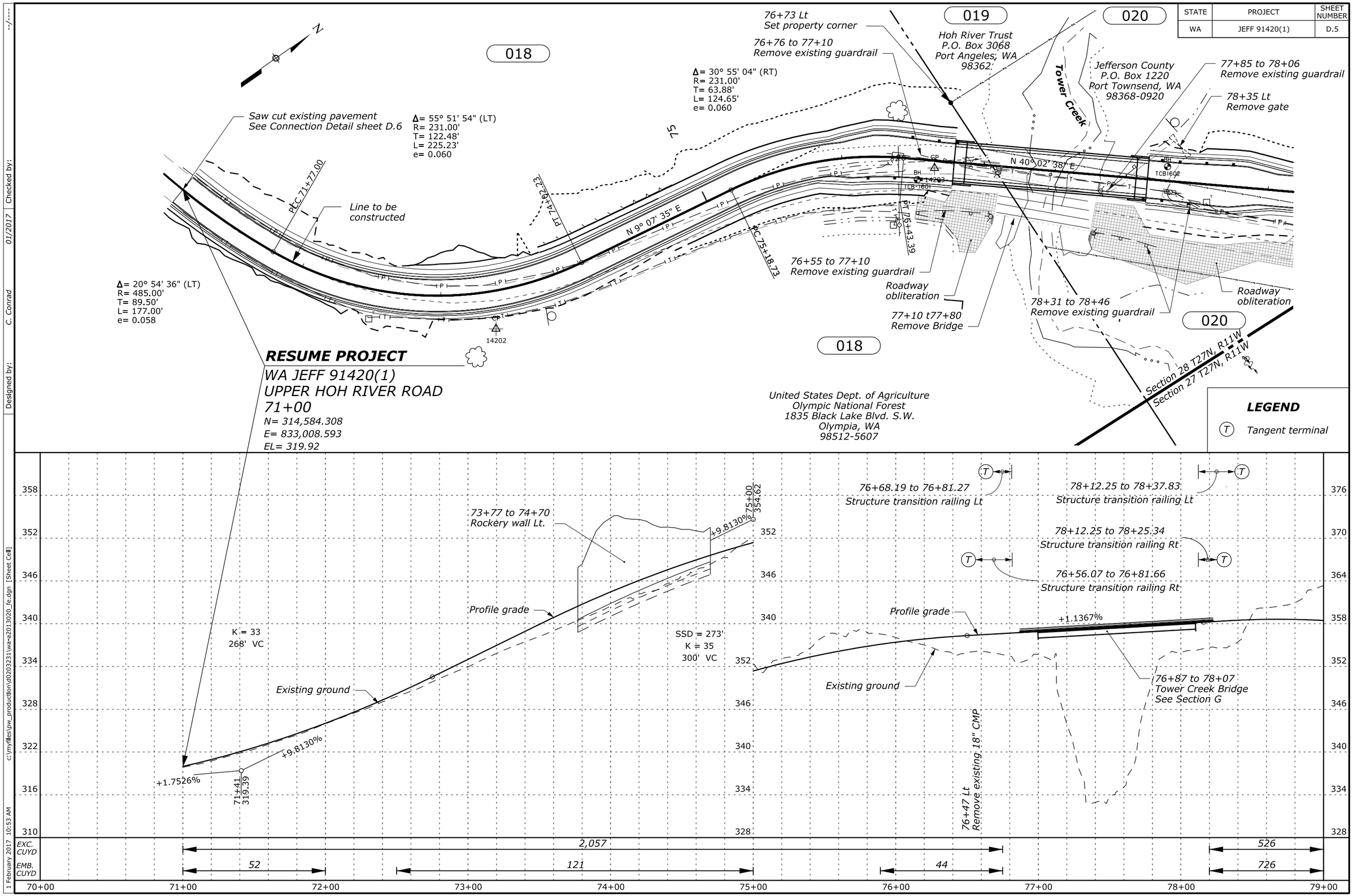

Designed by: C. Conrad | Checked by: 01/2017 | --/---

c:\myfiles\pw_production\d0203231\wa-a2013020_fe.dgn [Sheet Cell]

1 February 2017 10:53 AM

STATE	PROJECT	SHEET NUMBER
WA	JEFF 91420(1)	D.6

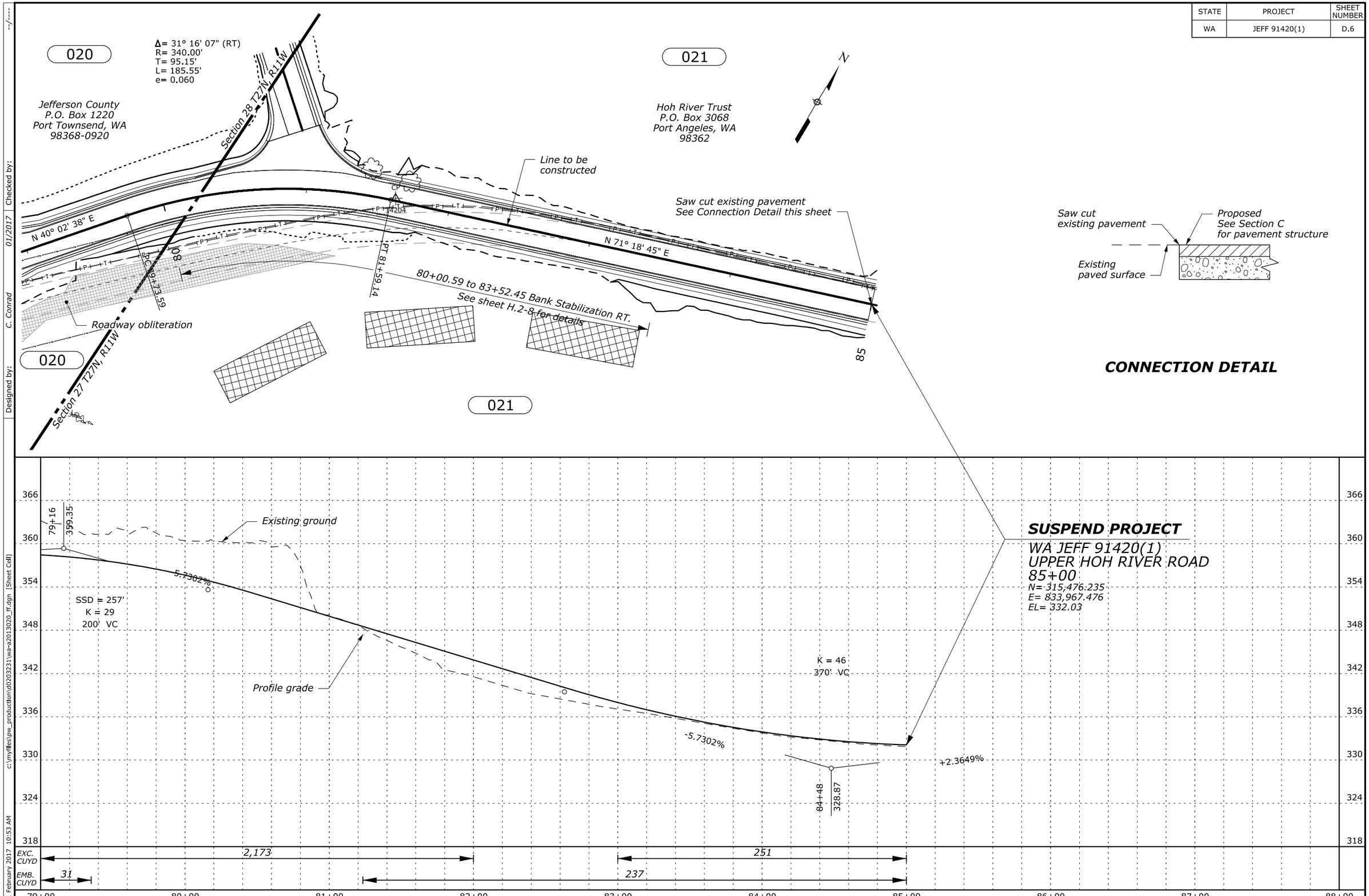

70% PLAN IN HAND 04-18-2017

Designed by: C. Conrad
Checked by: 01/2017
--/---
c:\mywfiles\pw_production\d0203231\wa-a2013020_ff.dgn [Sheet Cell]
1 February 2017 10:53 AM

STATE	PROJECT	SHEET NUMBER
WA	JEFF 91420(1)	D.7

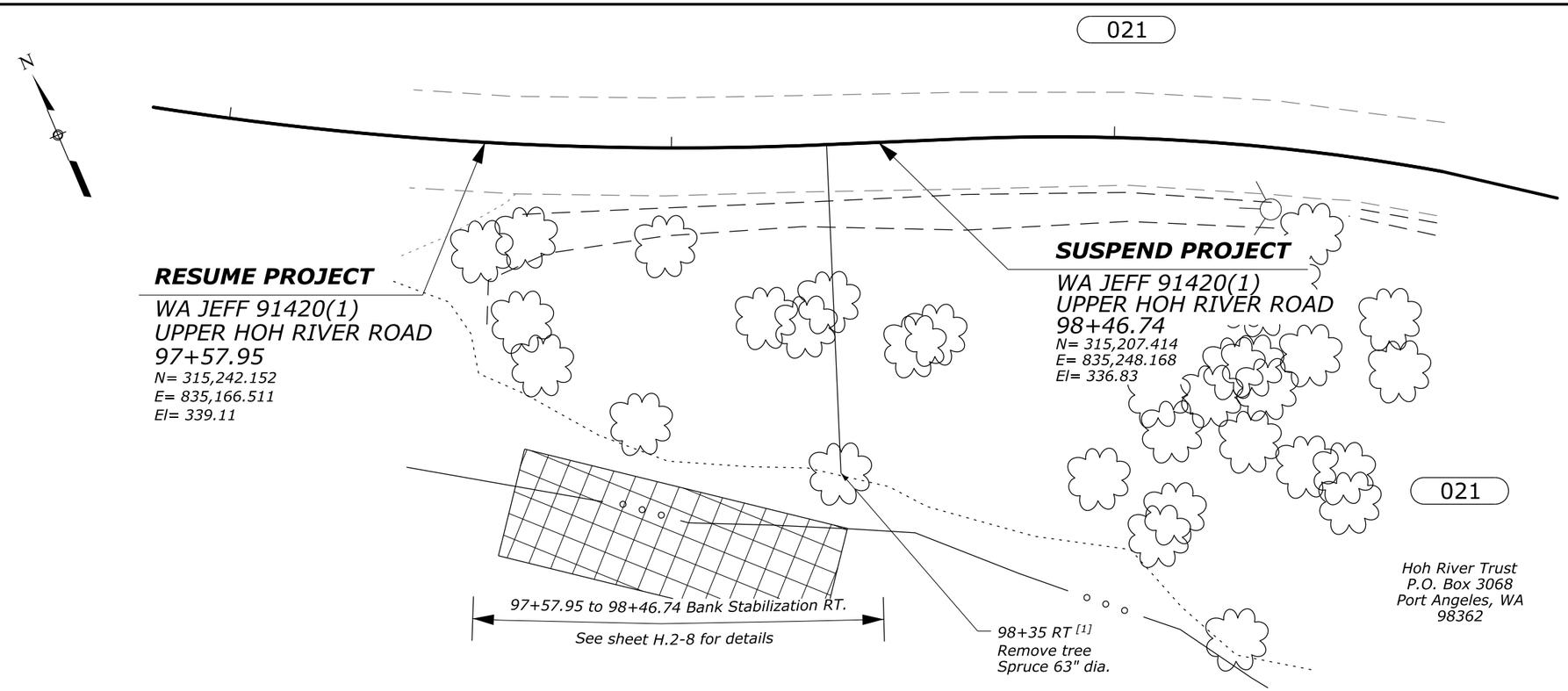

FOOTNOTE

[1] Verify exact location in field.

PLAN AND PLAN
95+00 to 99+00

70% PLAN IN HAND 04-18-2017

Designed by: C. Conrad | 10/2016 | Checked by: --/---

18 April 2017 11:15 AM c:\myfiles\pw_production\d0203231\wa=a2013020_fg.dgn [US_Sur_ft2D]

STATE	PROJECT	SHEET NUMBER
WA	JEFF 91420(1)	D.8

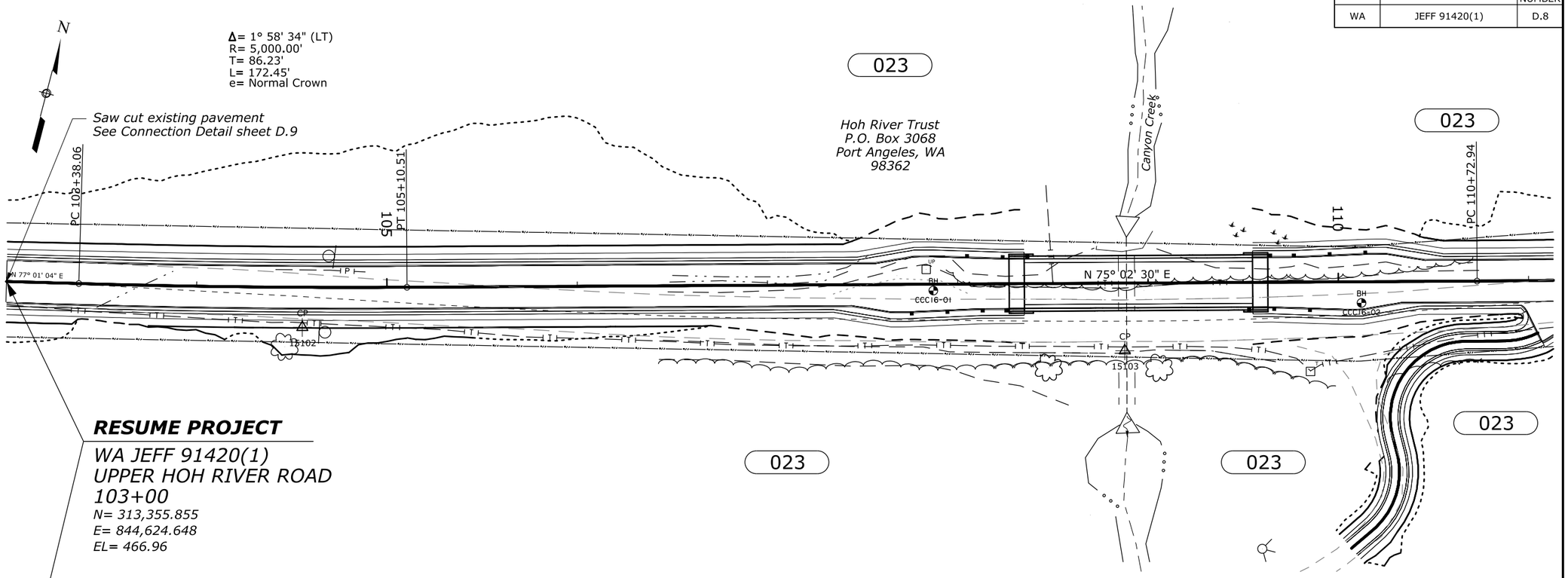

RESUME PROJECT

WA JEFF 91420(1)
UPPER HOH RIVER ROAD
103+00
N= 313,355.855
E= 844,624.648
EL= 466.96

LEGEND

(T) *Tangent terminal*

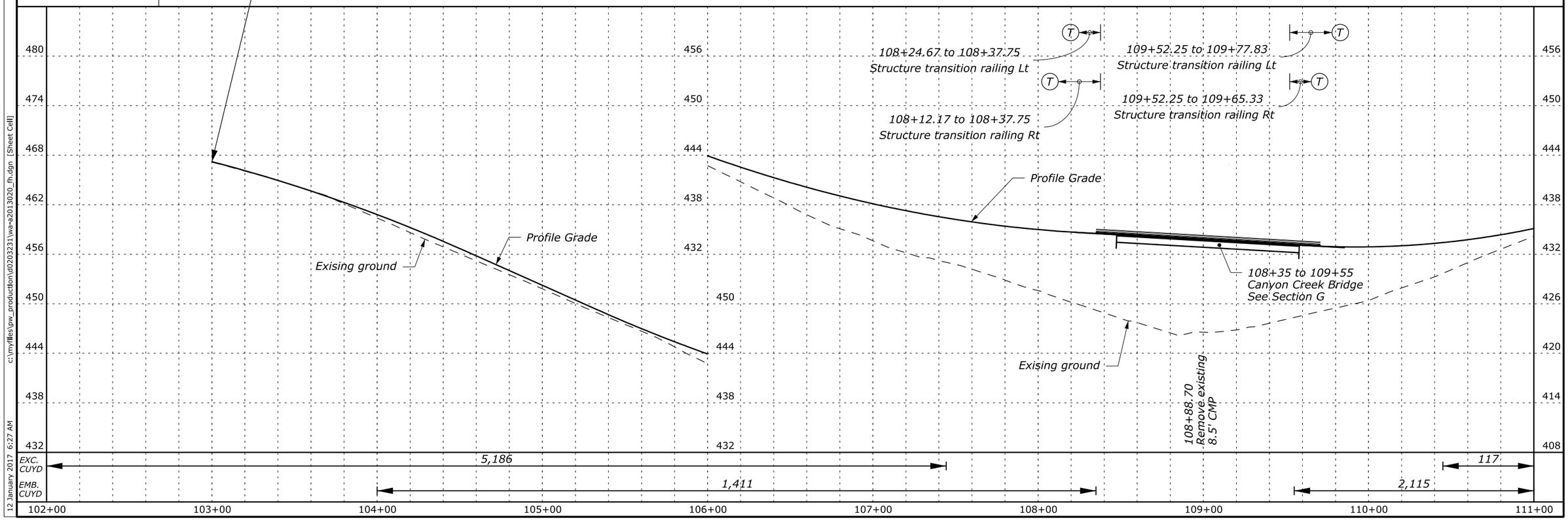

Designed by: C. Conrad 01/2017 Checked by: --/---

12 January 2017 6:27 AM c:\myfiles\pw_production\d0203231\wa-a2013020_fh.dgn [Sheet Cell]

STATE	PROJECT	SHEET NUMBER
WA	JEFF 91420(1)	D.9

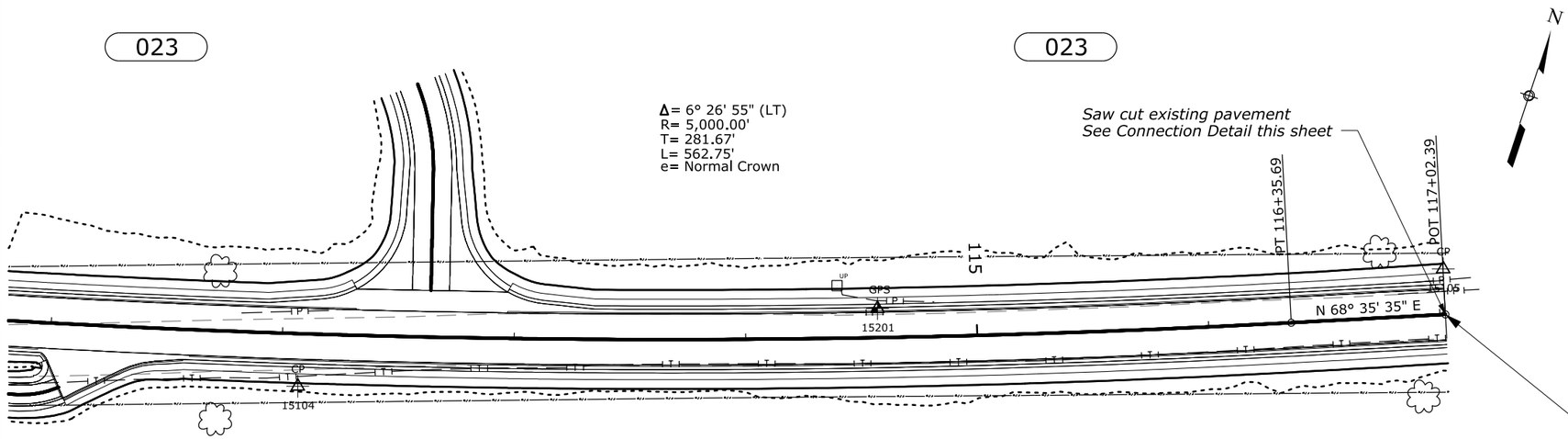

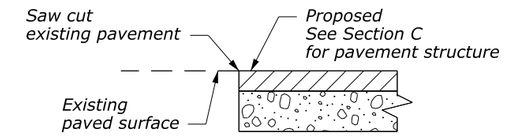

CONNECTION DETAIL

Hoh River Trust
P.O. Box 3068
Port Angeles, WA
98362

END PROJECT

WA JEFF 91420(1)
UPPER HOH RIVER ROAD
117+02.39
N= 313,751.062
E= 845,968.915
EL= 430.27

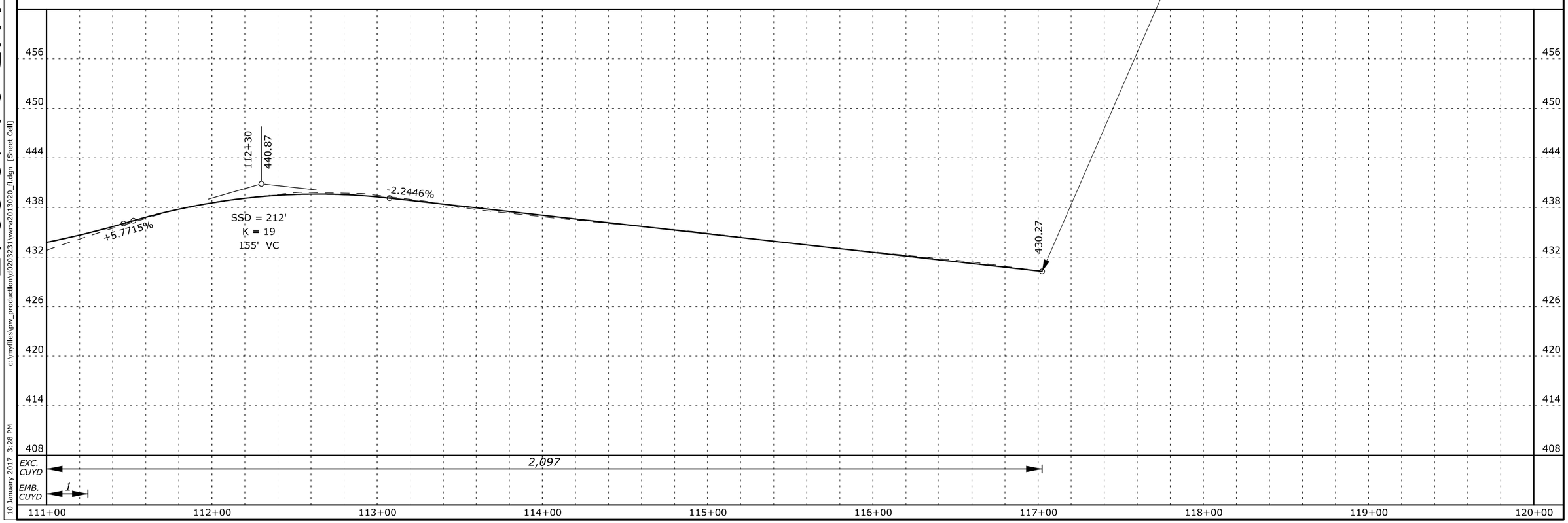

70% PLAN IN HAND 04-18-2017

Designed by: C. Conrad 01/30/17 Checked by: --/--- Revised: 10 January 2017 3:28 PM c:\myfiles\pw_production\d0203231\wa-a2013020_fl.dgn [Sheet Cell]

STATE	PROJECT	SHEET NUMBER
WA	JEFF 91420(1)	E.1

ROADWAY APPROACH QUANTITIES

APPROACH	ITEM 20401-0000 ROADWAY EXCAVATION	ITEM 30202-1000 ROADWAY AGGREGATE, METHOD 1	EMBANKMENT
	(CUYD)	(TON)	(CUYD)
81+08	106	87	0
111+22	90	97	6
112+63	326	130	1
TOTAL	**522**	**314**	**7**

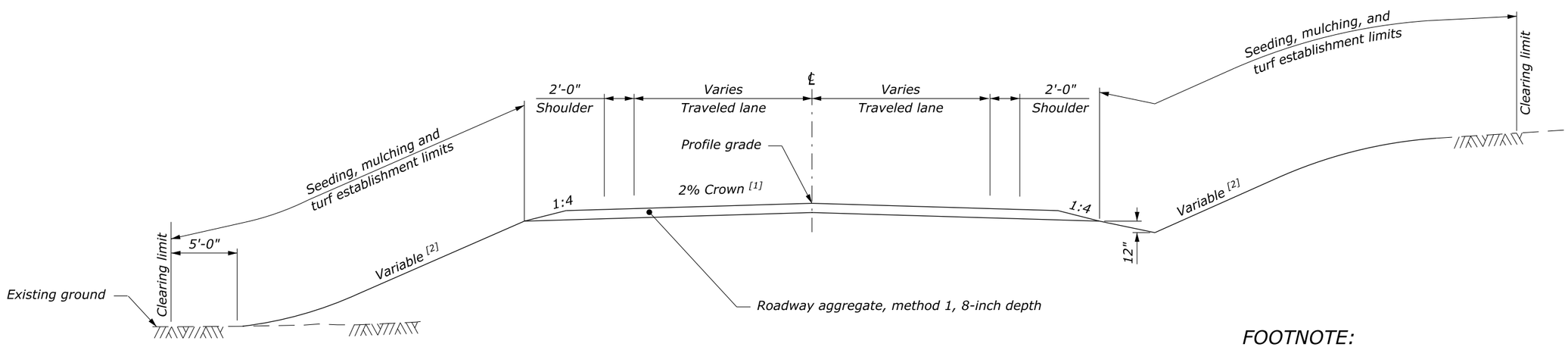

APPROACH TYPICAL SECTION

FOOTNOTE:

[1] Superelevate roadway on curves at the rate 'e' as indicated on the plan and profile curve data.

[2] Construct slopes as shown in the Staking Report.

APPROACH ROAD TYPICAL SECTION

70% PLAN IN HAND 04-18-2017

Designed by: --/---
Checked by: --/---
13 April 2017 4:42 PM c:\myfiles\pw_production\d0203232\wa-a2013020-ja.dgn [US_Sur_ft2D]

STATE	PROJECT	SHEET NUMBER
WA	JEFF 91420(1)	E.2

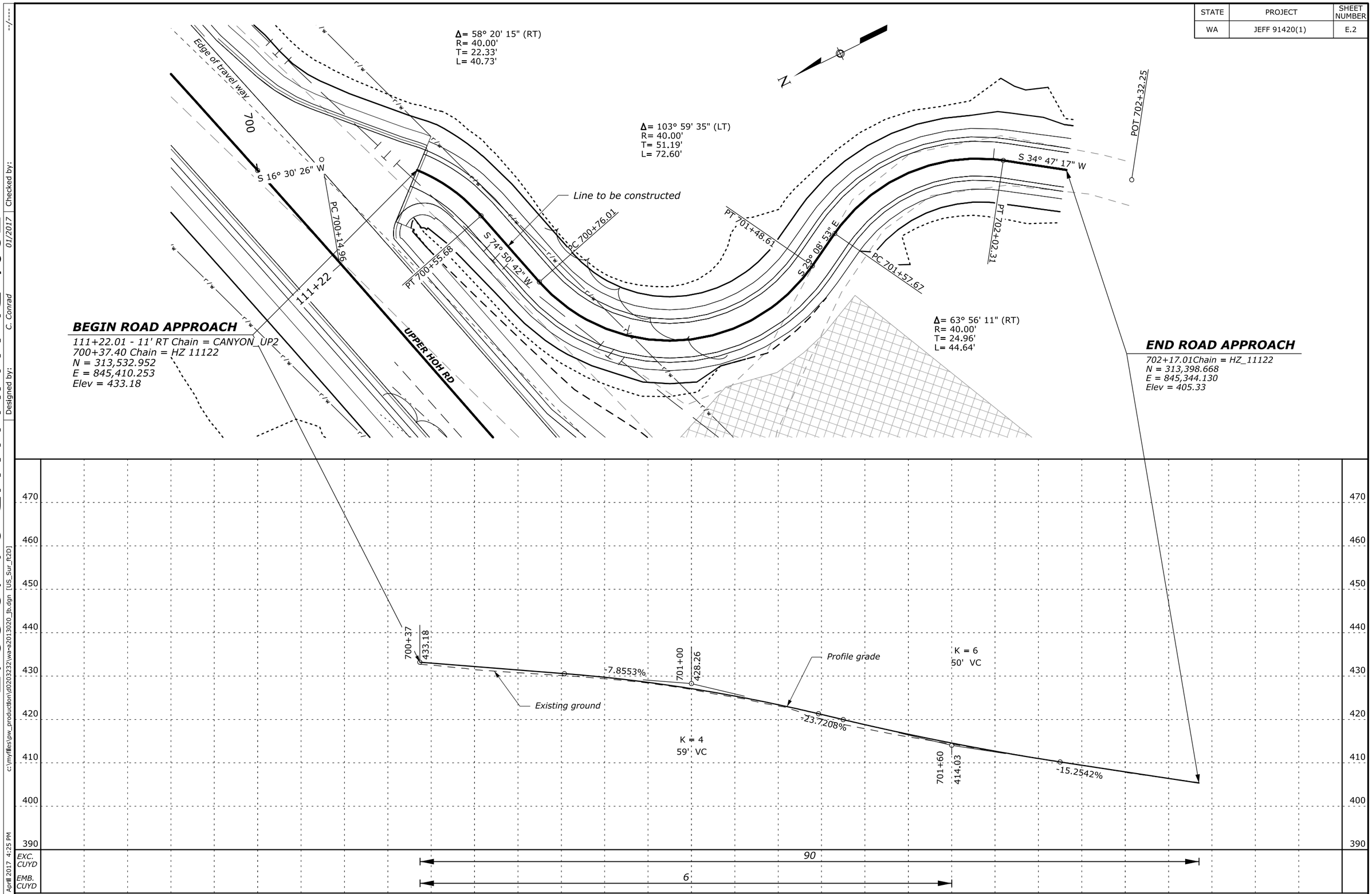

70% PLAN IN HAND 04-18-2017

Designed by: C. Conrad 01/2017 Checked by: --/---

c:\myfiles\pw_production\d0203232\wa-a2013020_fb.dgn [US_Sur_ft2D]

13 April 2017 4:25 PM

STATE	PROJECT	SHEET NUMBER
WA	JEFF 91420(1)	E.3

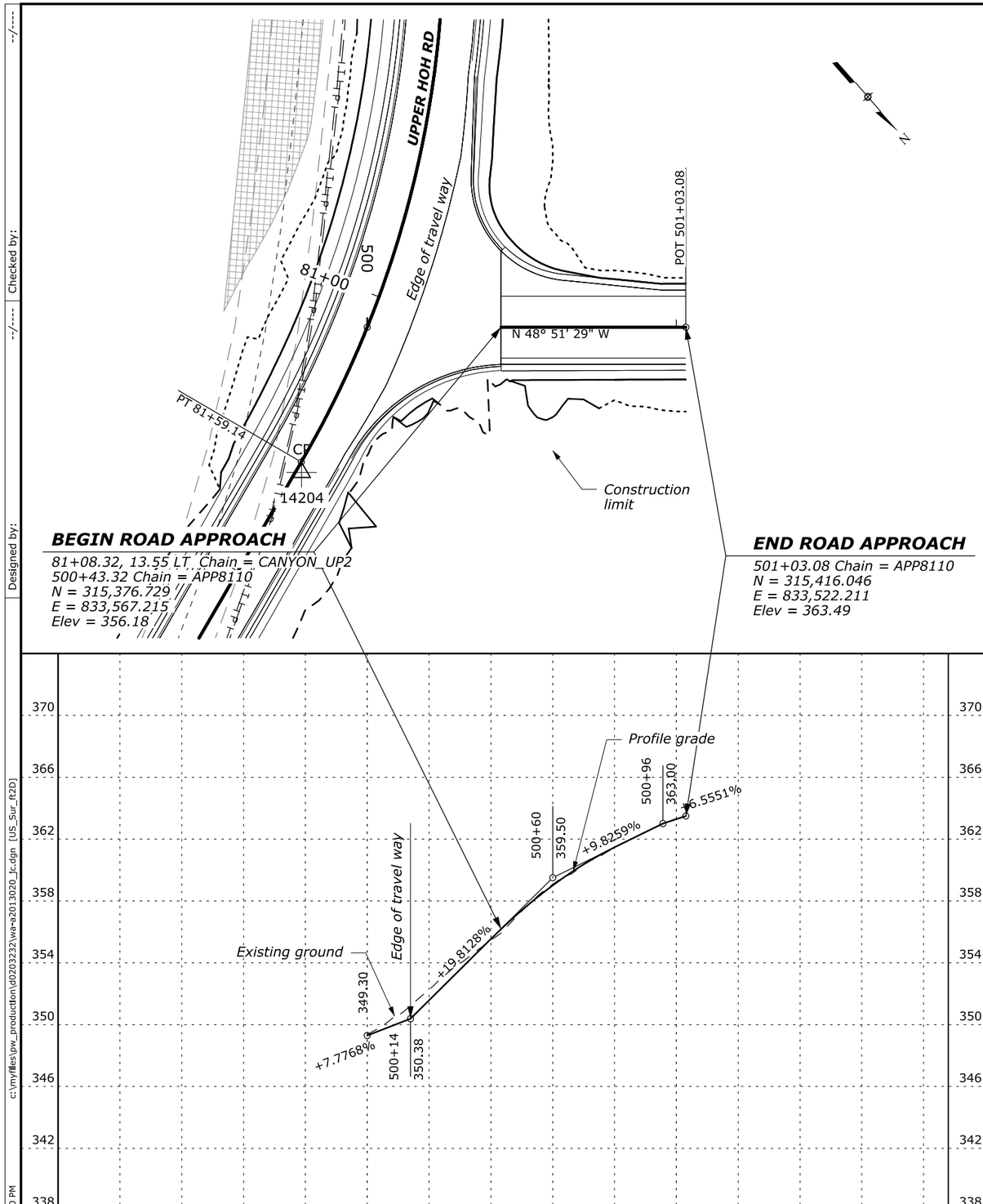

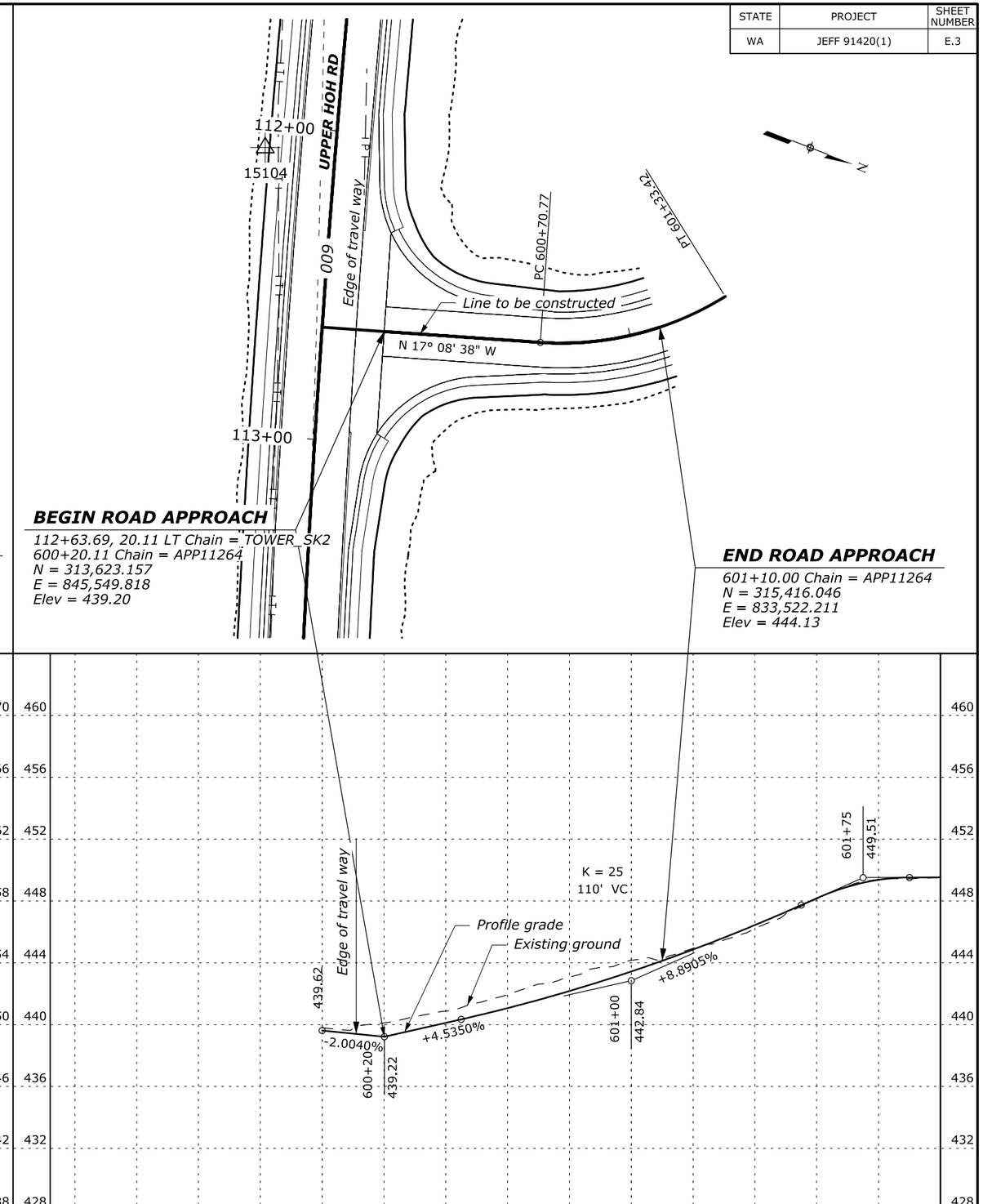

70% PLAN IN HAND 04-18-2017

c:\mywfiles\pw_production\d0203232\wa-a2013020_jc.dgn [US_Sur_ft2D]

13 April 2017 4:40 PM

Designed by: --/---- Checked by: --/----

STATE	PROJECT	SHEET NUMBER
WA	JEFF 91420(1)	F.1

ITEM 15705-0100 SOIL EROSION CONTROL, SILT FENCE

See detail sheet F.9

LOCATION	SIDE	QUANTITY (LNFT)	REMARKS
47+81 to 50+79	RT	330	MP 4 AOP
49+22 to 49+39	LT	80	MP 4 AOP STREAM BANK
49+71 to 49+84	LT	65	
71+00 to 76+99	RT	660	TOWER CREEK
77+80 to 85+00	RT	740	
77+34	LT/RT	240	TOWER CREEK STREAM BANK
77+61	LT/RT	215	
103+00 to 108+68	RT	590	CANYON CREEK
109+11 to 110+22	RT	175	
107+47 to 108+49	LT	110	
109+29 to 110+43	LT	120	
108+51	LT/RT	245	CANYON CREEK STREAM BANK
109+30	LT/RT	225	
TOTAL		**3,795**	

ITEM 15706-0200 SOIL EROSION CONTROL, CHECK DAM (FILTER ROCK)

See detail sheet F.10

LOCATION	SIDE	QUANTITY (EACH)	REMARKS
47+81 to 49+31	LT	3	MP4 AOP
49+70 to 50+80	LT	3	MP4 AOP
78+55 to 80+75	LT	6	Tower Creek
110+42 to 112+40	LT	5	Canyon Creek
112+71 to 117+02	LT	7	Canyon Creek
112+63 to 117+02	RT	5	Canyon Creek
TOTAL		**29**	

FILTER ROCK CHECK DAM WITH ROLLED EROSION CONTROL PRODUCT

See detail sheet F.11

LOCATION	SIDE	ITEM 15706-0200 SOIL EROSION CONTROL, CHECK DAM (FILTER ROCK) (EACH)	ROLLED EROSION CONTROL PRODUCT [1] SQYD	REMARKS
72+85 to 75+50	LT	14	846	Tower Creek
103+00 to 107+52	LT	16	604	Canyon Creek
111+40 to 112+63	RT	4	168	
700+22 to 700+55	LT	2	59	Approach 111+22 RT
700+46 to 701+20	RT	4	111	
701+19 to 702+17	LT	6	141	
701+60 to 702+17	RT	3	65	
TOTAL		**49**	**1,994**	

FOOTNOTE

[1] Quantity tabulated in ITEM 62901-0000. See Sheet D.2.

TABULATION OF EROSION/SEDIMENT CONTROL QUANTITIES

70% PLAN IN HAND 04-18-2017

Designed by: --/--- Checked by: --/---

c:\mywfiles\pw_production\d0203227\wa-a2013020_da.dgn [US_Sur_ft2D]

18 April 2017 2:12 PM

STATE	PROJECT	SHEET NUMBER
WA	JEFF 91420(1)	F.2

ITEM 62502-0000
TURF ESTABLISHMENT

LOCATION	SIDE	QUANTITY (SQYD)	REMARKS
47+71.15 to 50+79.67	LT	298	MP 4 AOP
47+71.15 to 50+79.68	RT	154	
71+00 to 76+79	LT	939	TOWER CREEK
71+00 to 76+79	RT	376	
78+15 to 80+74	LT	480	
78+15 to 85+00	RT	745	
81+06 to 85+00	LT	210	
500+43.32 to 501+03.07	LT	44	APP 81+10 LT
500+43.32 to 501+03.08	RT	78	
103+00 TO 108+35	LT	2,582	CANYON CREEK
103+00 TO 108+35	RT	564	
109+55 TO 112+32	LT	555	
109+55 TO 110+97	RT	105	
111+08 TO 117+02.39	RT	659	
112+97 TO 117+02.39	LT	690	
700+37.39 to 702+17.01	LT	110	APP 111+22 RT
700+37.39 to 702+17.01	RT	109	
600+20 to 601+10	LT	119	APP 112+64 LT
600+20 to 601+10	RT	112	
TOTAL		**8,929**	

ITEM 62901-0000
ROLLED EROSION CONTROL PRODUCT

See detail sheet F.15

LOCATION	SIDE	QUANTITY (SQYD)	REMARKS
47+71.15 to 50+79.67	LT	298	MP 4 AOP
47+71.15 to 50+79.68	RT	154	
71+00 to 76+79	LT	939	TOWER CREEK
71+00 to 76+79	RT	376	
78+15 to 80+74	LT	480	
78+15 to 85+00	RT	745	
81+06 to 85+00	LT	210	
500+43.32 to 501+03.07	LT	44	APP 81+10 LT
500+43.32 to 501+03.08	RT	78	
103+00 TO 108+35	LT	2,582	CANYON CREEK
103+00 TO 108+35	RT	564	
109+55 TO 112+32	LT	555	
109+55 TO 110+97	RT	105	
111+08 TO 117+02.39	RT	659	
112+97 TO 117+02.39	LT	690	
700+37.39 to 702+17.01	LT	110	APP 111+22 RT
700+37.39 to 702+17.01	RT	109	
600+20 to 601+10	LT	119	APP 112+64 LT
600+20 to 601+10	RT	112	
TOTAL		**8,929**	

TABULATION OF EROSION/SEDIMENT CONTROL QUANTITIES

70% PLAN IN HAND 04-18-2017

Designed by: --/--- Checked by: --/---
c:\myfiles\pw_production\d0203227\wa-a2013020_da1.dgn [US_Sur_ft2D]
18 April 2017 2:13 PM

STATE	PROJECT	SHEET NUMBER
WA	JEFF 91420 (1)	F.3

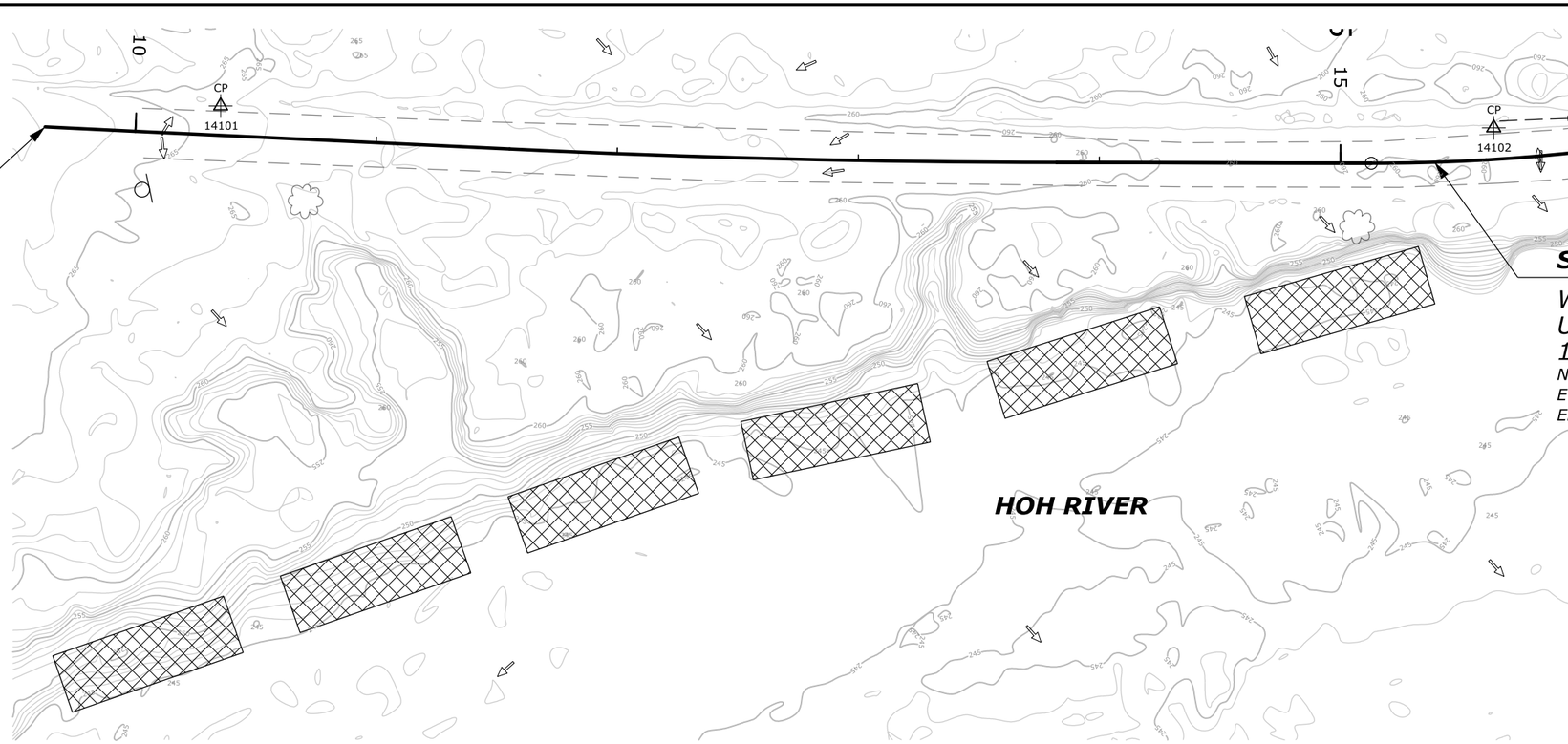

BEGIN PROJECT

WA JEFF 91420(1)
UPPER HOH RIVER ROAD
9+62.52
N= 318,075.887
E= 814,443.431
El= 266.89

SUSPEND PROJECT

WA JEFF 91420(1)
UPPER HOH RIVER ROAD
15+39.03
N= 318,061.255
E= 815,019.639
El= 259.98

LEGEND

- *Flow Arrow*
- *Silt Fence*
- *Filter Rock Check Dam*
- *Inlet Protection*
- *Roadway Obliteration*

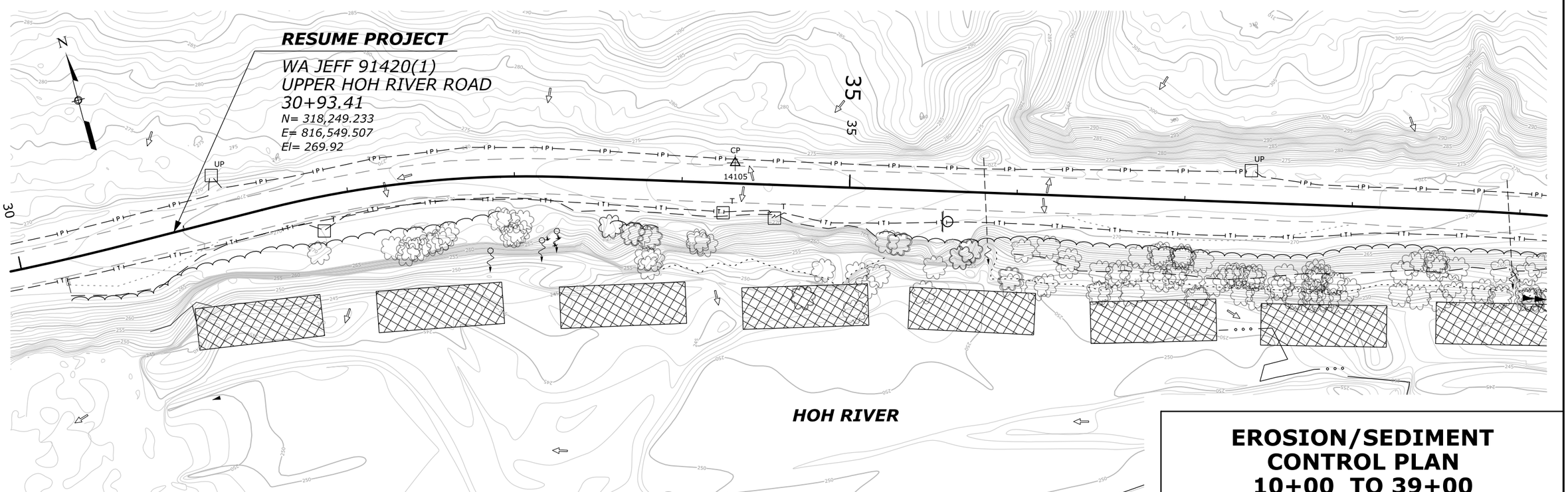

RESUME PROJECT

WA JEFF 91420(1)
UPPER HOH RIVER ROAD
30+93.41
N= 318,249.233
E= 816,549.507
El= 269.92

EROSION/SEDIMENT CONTROL PLAN
10+00 TO 39+00

70% PLAN IN HAND 04-18-2017

Designed by: C. Conrad | 10/2016 | Checked by: --/---

18 April 2017 12:50 PM c:\myfiles\pw_production\d0203227\wa-a2013020_db.dgn [US_Sur_ft2D]

STATE	PROJECT	SHEET NUMBER
WA	JEFF 91420 (1)	F.4

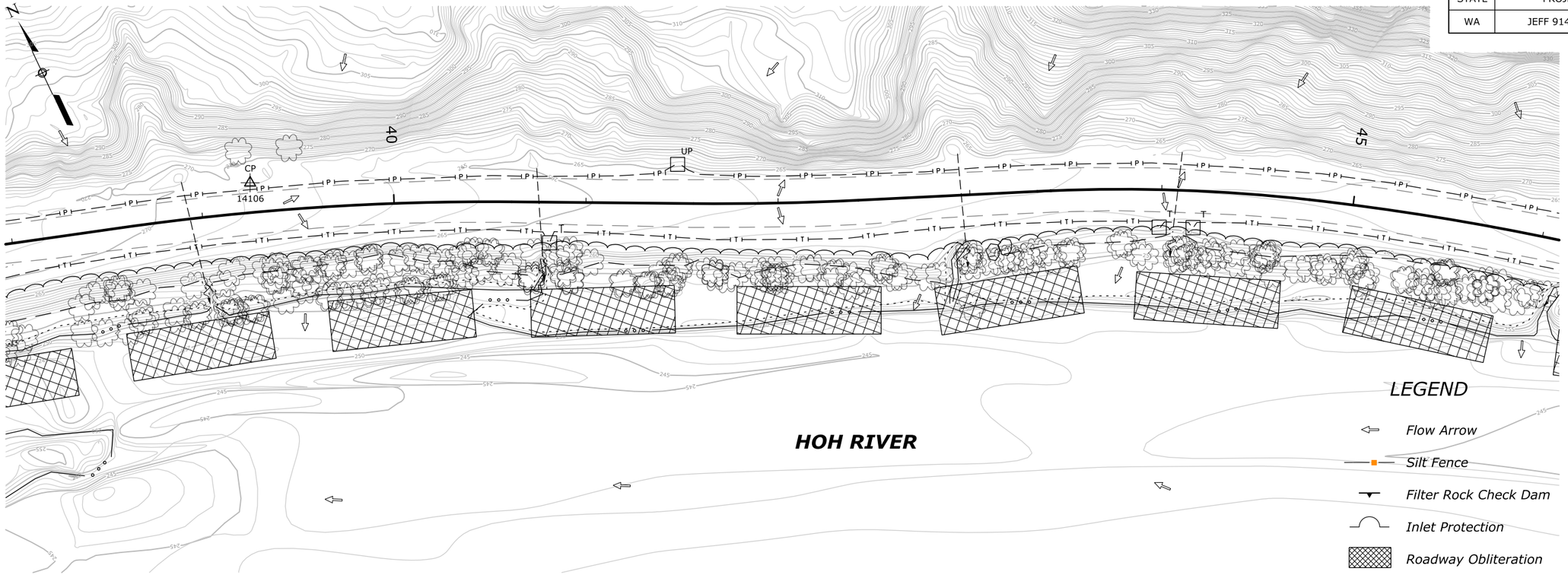

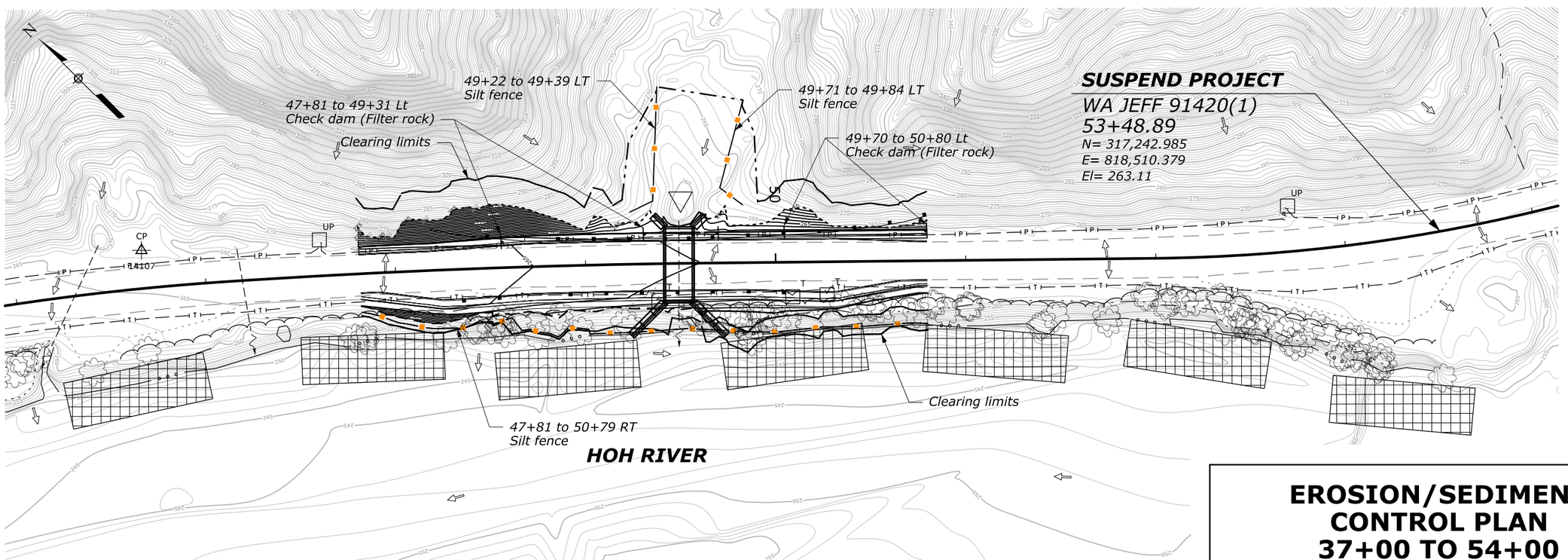

EROSION/SEDIMENT CONTROL PLAN 37+00 TO 54+00

70% PLAN IN HAND 04-18-2017

Designed by: C. Conrad | 10/2016 | Checked by: --/---

18 April 2017 12:53 PM c:\myfiles\pw_production\d0203227\wa-a2013020_dc.dgn [US_Sur_ft2D]

STATE	PROJECT	SHEET NUMBER
WA	JEFF 91420(1)	F.5

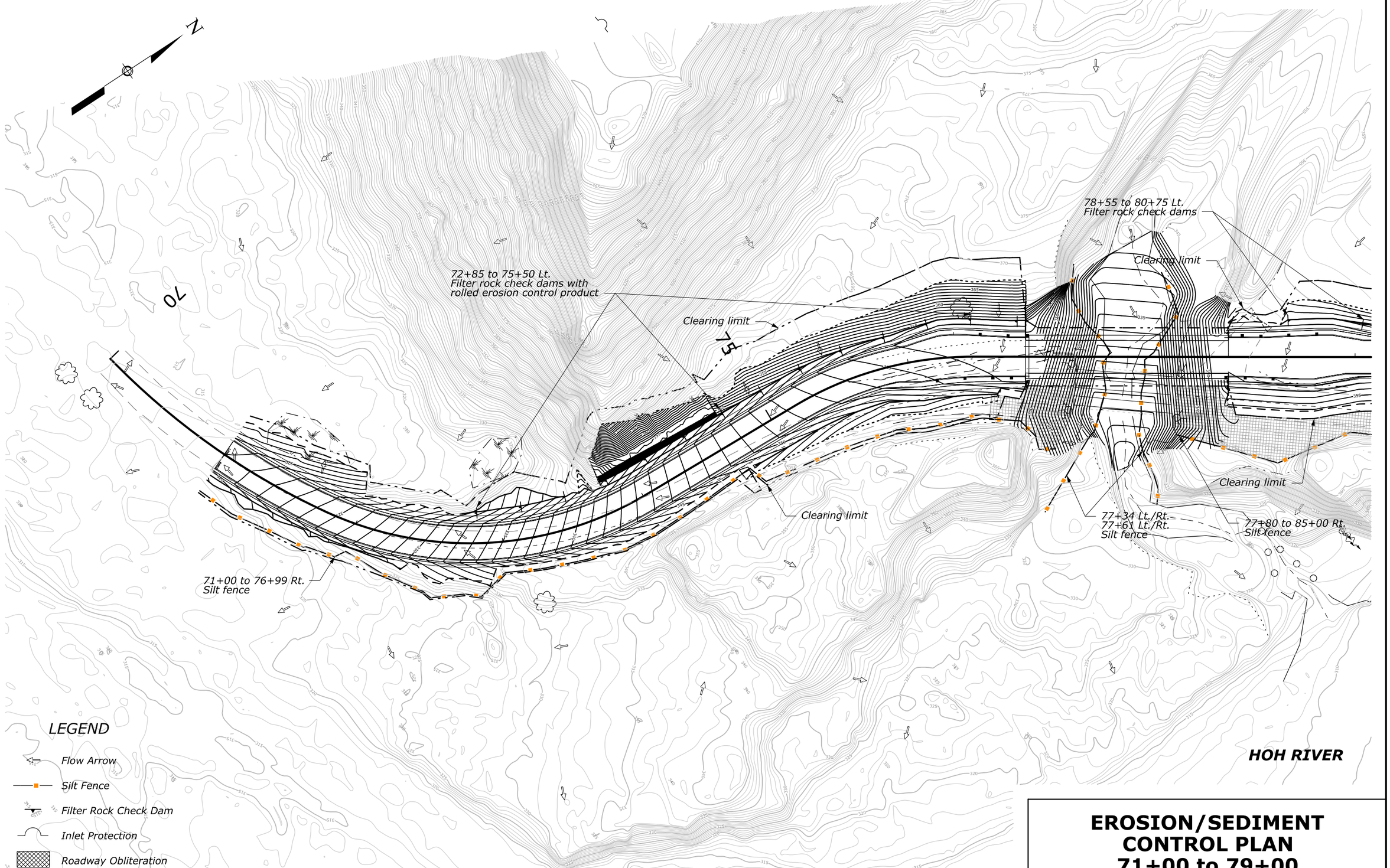

EROSION/SEDIMENT CONTROL PLAN 71+00 to 79+00

70% PLAN IN HAND 04-18-2017

Designed by: C. Conrad 01/2017 Checked by: --/---

13 April 2017 12:42 PM c:\myfiles\pw_production\d0203227\wa-a2013020_dd.dgn [US_Sur_ft2D]

STATE	PROJECT	SHEET NUMBER
WA	JEFF 91420(1)	F.6

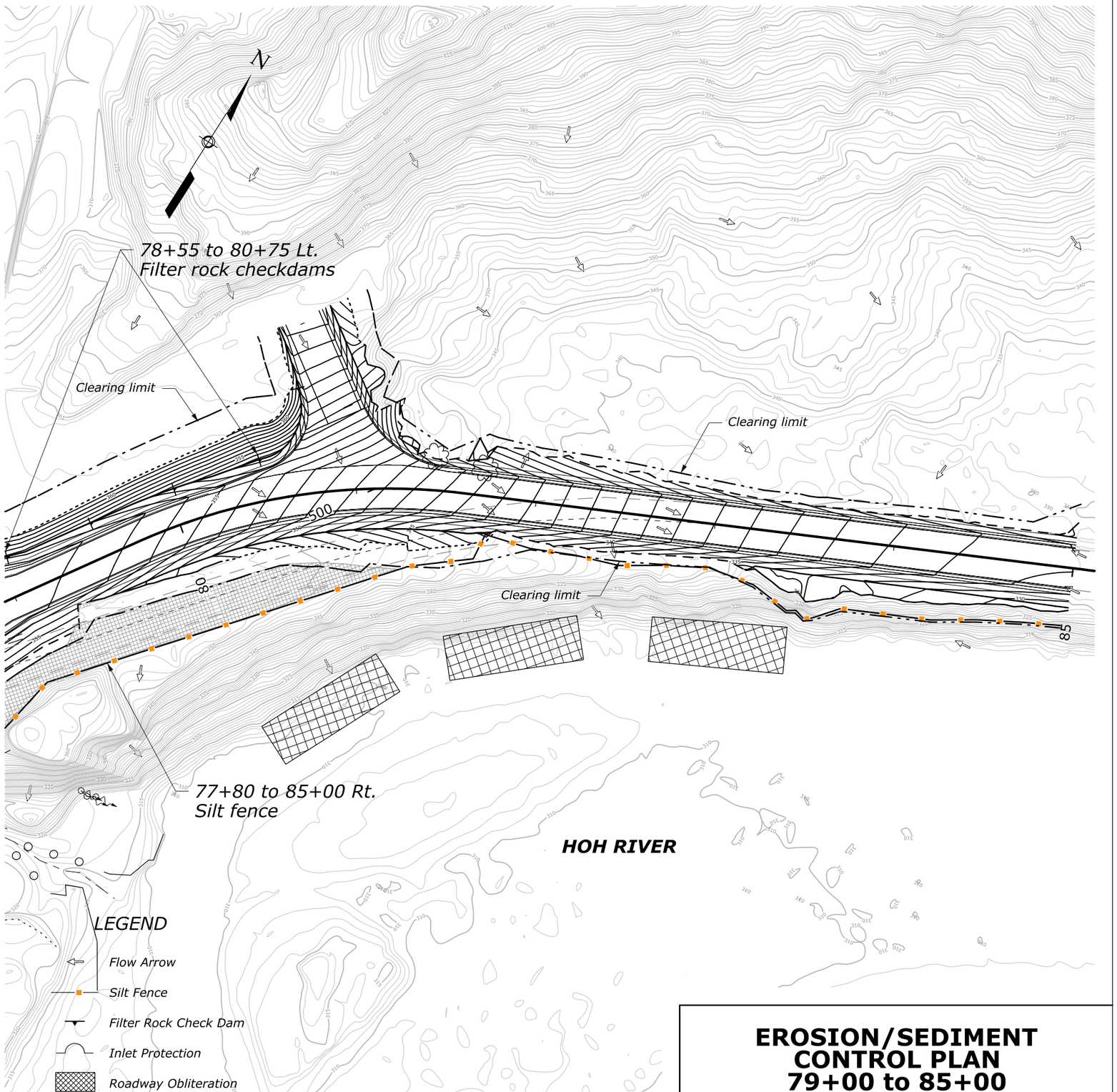

EROSION/SEDIMENT CONTROL PLAN
79+00 to 85+00

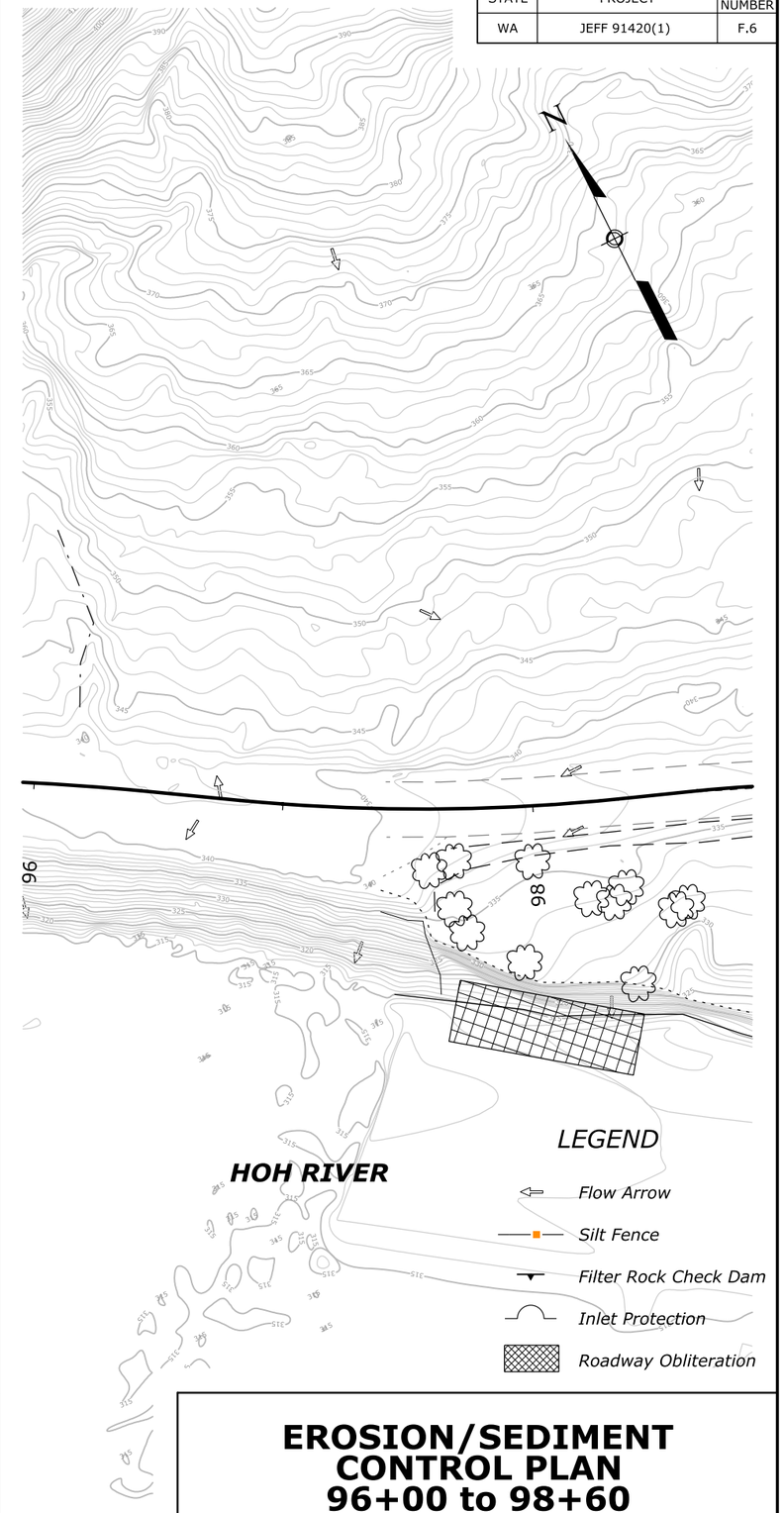

EROSION/SEDIMENT CONTROL PLAN
96+00 to 98+60

70% PLAN IN HAND 04-18-2017

Designed by: C. Conrad | 01/2017 | Checked by: --/---

c:\myfiles\pw_production\d0203227\wa-a2013020_de.dgn [US_Sur_ft2D]

13 April 2017 12:41 PM

STATE	PROJECT	SHEET NUMBER
WA	JEFF 91420(1)	F.7

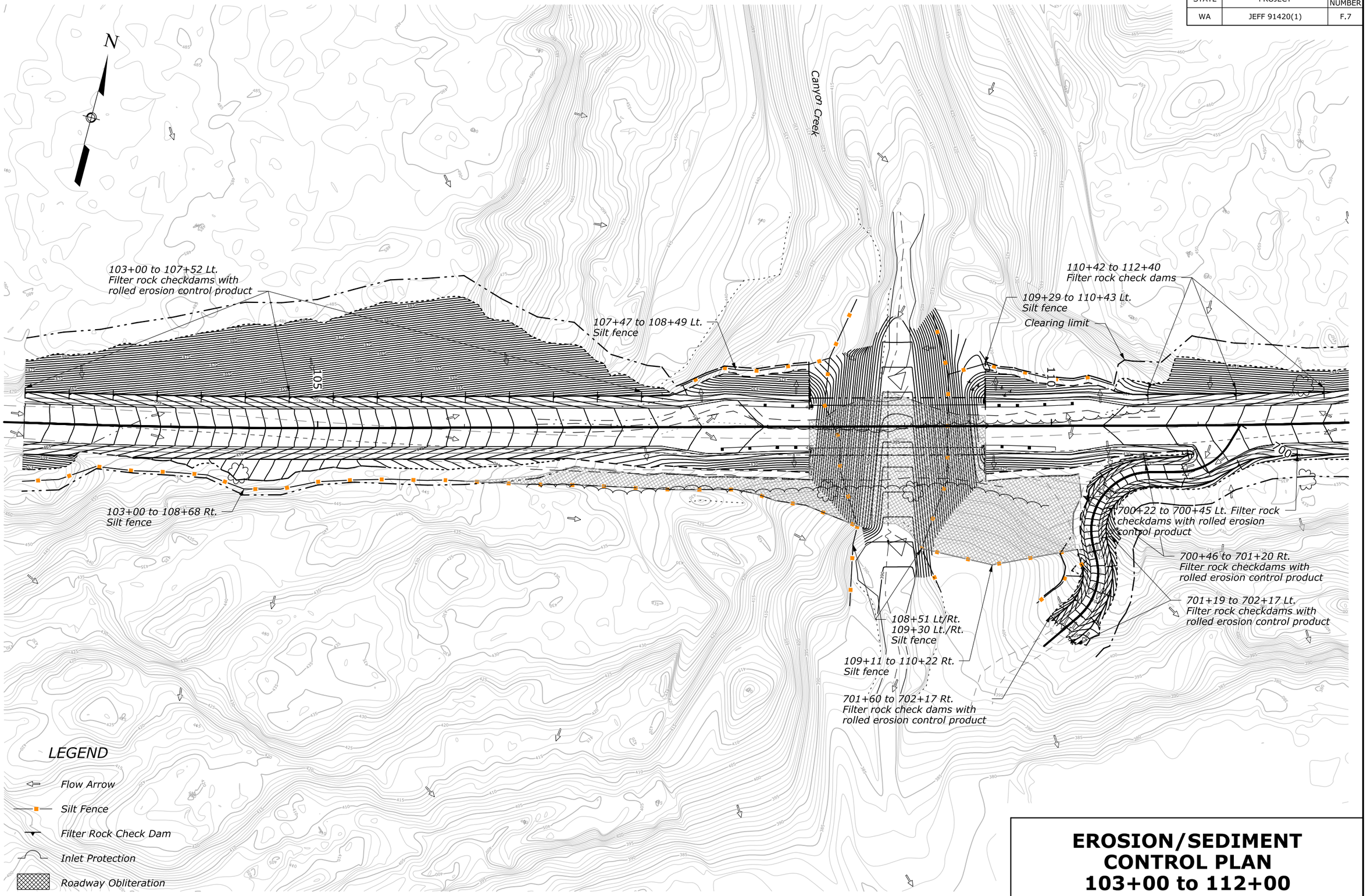

EROSION/SEDIMENT CONTROL PLAN 103+00 to 112+00

70% PLAN IN HAND 04-18-2017

Designed by: C. Conrad | 01/2017 | Checked by: --/---

c:\myfiles\pw_production\d0203227\wa-a2013020_df.dgn [US_Sur_ft2D]

13 April 2017 12:40 PM

STATE	PROJECT	SHEET NUMBER
WA	JEFF 91420(1)	F.8

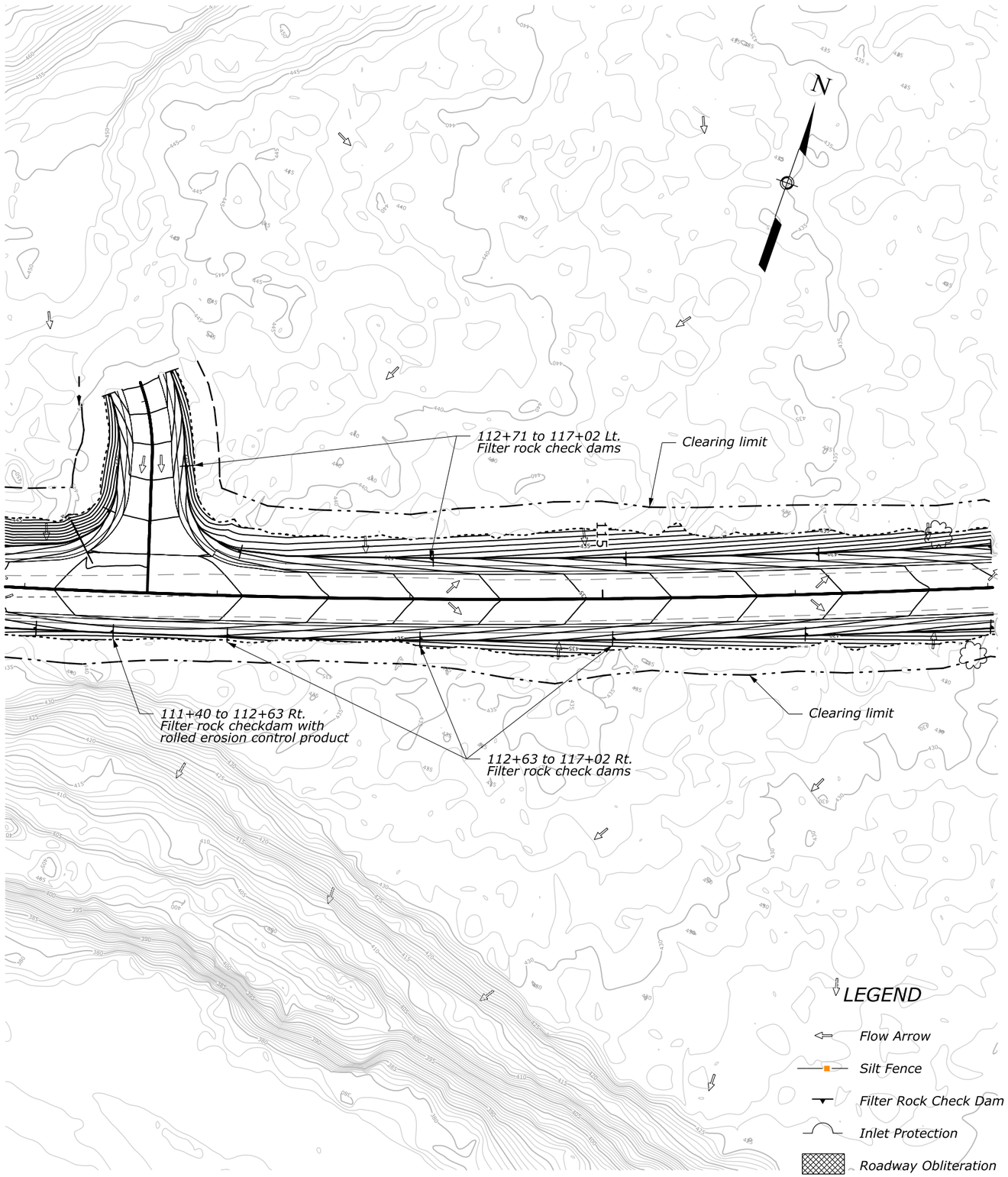

EROSION/SEDIMENT CONTROL PLAN
112+00 to 117+03.39

70% PLAN IN HAND 04-18-2017

Designed by: C. Conrad | 01/2017 | Checked by: --/---

c:\mnyfiles\pw_production\d0203227\wa-a2013020_dg.dgn [US_Sur_ft2D]

13 April 2017 12:39 PM

STATE	PROJECT	SHEET NUMBER
WA	JEFF 91420(1)	F.9

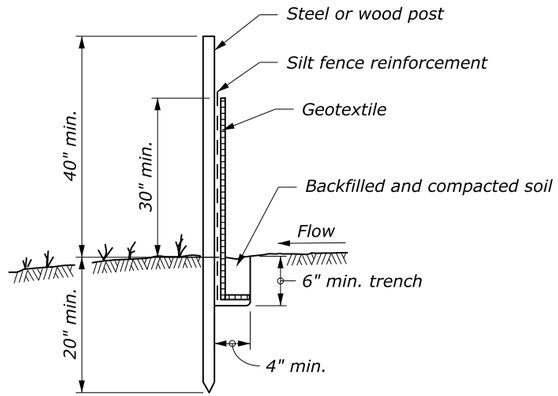

POST AND GEOTEXTILE INSTALLATION DETAIL

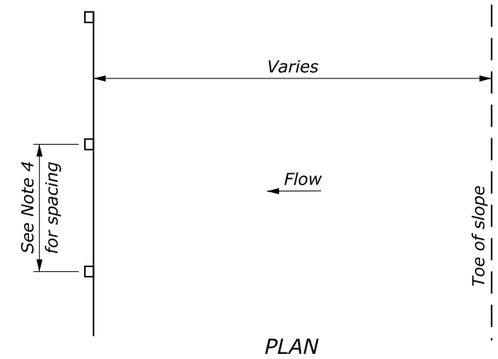

PLAN

NOTE:

1. Alternate preassembled silt fence options will be allowed as long as specified dimensions are satisfied. Follow manufacturer's recommendations for installation procedures. All types must ensure silt fence remains attached to, and does not slide down, supporting posts.
2. Install silt fence to follow the ground contours as closely as possible.
3. Curve ends of silt fence upgrade to prevent water from running around the ends.
4. 10-foot (max.) spacing with silt fence reinforcement. 6-foot (max.) spacing without silt fence reinforcement.

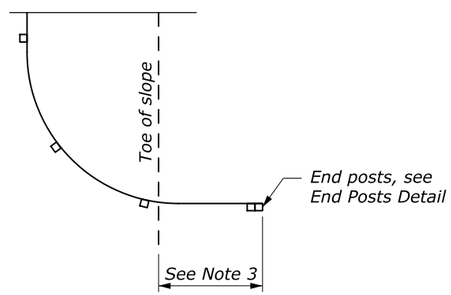

PLAN

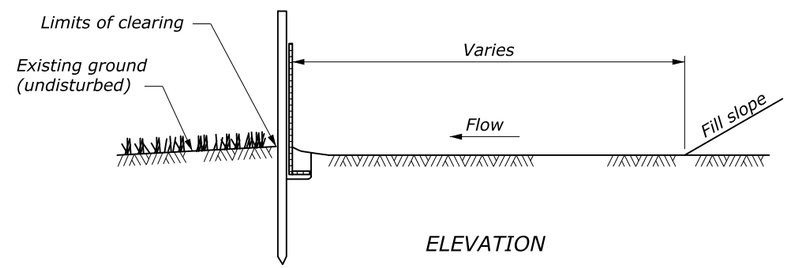

ELEVATION

SILT FENCE INSTALLATION AT TOE OF FILL

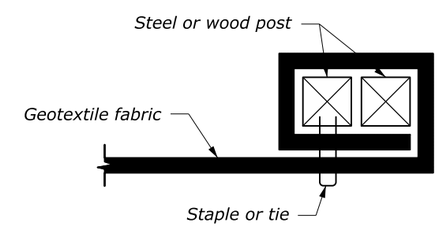

PLAN

END POSTS DETAIL

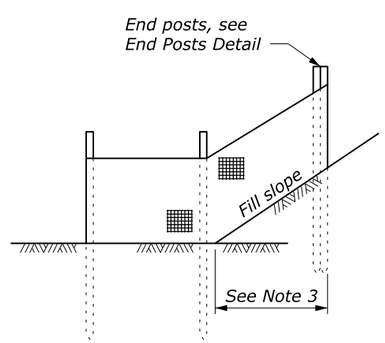

ELEVATION

END DETAIL

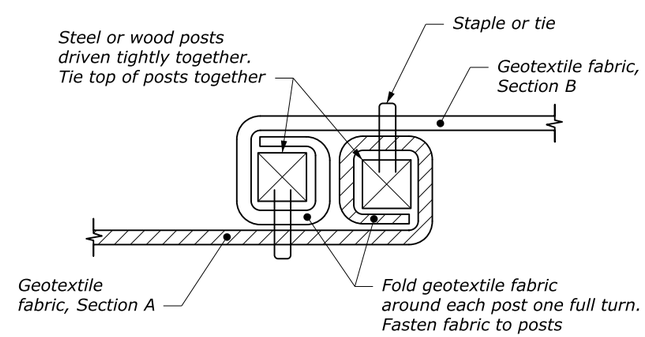

PLAN

POSTS AT JOINTS

NO SCALE

U.S. DEPARTMENT OF TRANSPORTATION
FEDERAL HIGHWAY ADMINISTRATION
WESTERN FEDERAL LANDS HIGHWAY DIVISION

U.S. CUSTOMARY DETAIL

SILT FENCE

DETAIL APPROVED FOR USE --/----
REVISED: 7/2016

DETAIL
W157-1

70% PLAN IN HAND 04-18-2017

27 January 2017 7:22 AM c:\myfiles\pw_production\d0203227\wa-a2013020_dh.dgn [USC]

STATE	PROJECT	SHEET NUMBER
WA	JEFF 91420(1)	F.10

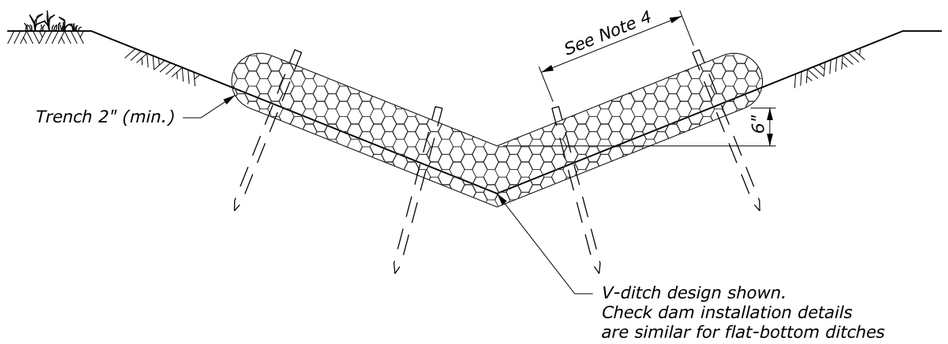

CROSS SECTION

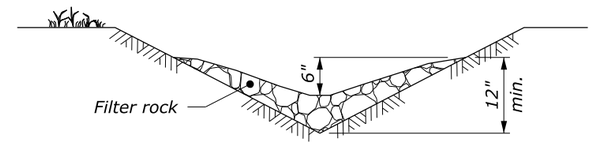

V-DITCH
CROSS SECTION

NOTE:

1. Construct check dams from fiber rolls, filter rock, or gravel bags as approved by the CO, to meet the functional requirements of the check dam device.
2. Repair all rills or gullies and properly compact prior to installation.
3. Install check dams in ditches perpendicular to the flowline.
4. Stake fiber rolls in place with 1⅛-inch x 1⅛-inch wood stakes. Drive stakes at each end of the fiber roll and at 2-foot (max.) spacing.
5. Drive stakes into undisturbed soil of trench bottom. Expose stakes 2-inches (min.) above top of fiber roll.
6. Provide sufficient length to prevent water from flowing around the ends of the fiber roll.
7. Adjust check dam spacing based on site-specific conditions.

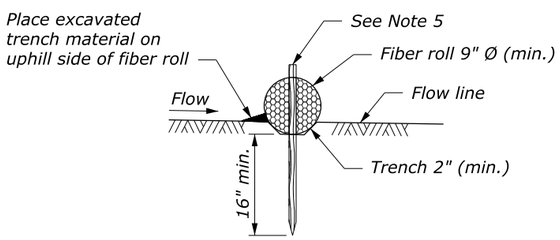

FIBER ROLL
STAKING DETAIL

FIBER ROLL CHECK DAM SPACING* (See Note 7)	
DITCH GRADE	CHECK DAM SPACING (max.) (FT)
2%	150
3%	100
4%	80
5%	60

* Spacing calculated based on 9" Ø minimum fiber roll.
Do not use fiber roll check dams on ditch grades steeper than 5%.

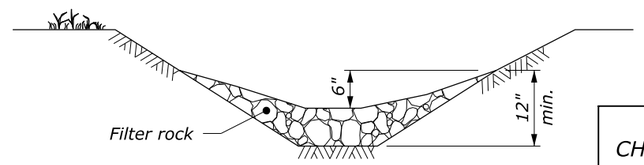

FLAT-BOTTOM DTICH
CROSS SECTION

FILTER ROCK CHECK DAM SPACING (See Note 7)	
DITCH GRADE	CHECK DAM SPACING (max.) (FT)
2%	150
3%	100
4%	80
5%	60
6%	50

FILTER ROCK CHECK DAM

GRAVEL BAG CHECK DAM SPACING* (See Note 7)	
DITCH GRADE	CHECK DAM SPACING (max.) (FT)
2%	150
3%	100
4%	80
5%	60
6%	50

* Do not use gravel bag check dams on ditch grades steeper than 6%.

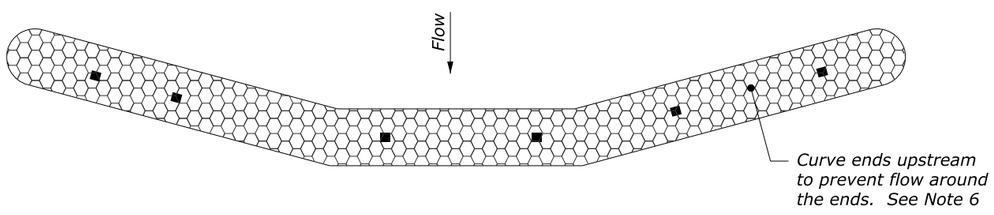

PLAN

FIBER ROLL CHECK DAM

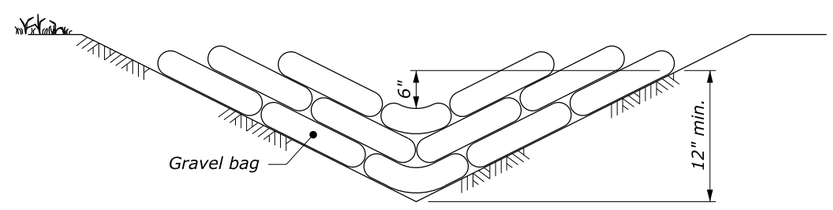

CROSS SECTION

GRAVEL BAG CHECK DAM

NO SCALE

U.S. DEPARTMENT OF TRANSPORTATION
FEDERAL HIGHWAY ADMINISTRATION
WESTERN FEDERAL LANDS HIGHWAY DIVISION

U.S. CUSTOMARY DETAIL

CHECK DAM
MODERATE GRADES

DETAIL APPROVED FOR USE --/----
REVISED: 7/2016

DETAIL
W157-15

70% PLAN IN HAND 04-18-2017

27 January 2017 7:10 AM c:\myfiles\pw_production\d0203227\wa-a2013020_di.dgn [USC]

STATE	PROJECT	SHEET NUMBER
WA	JEFF 91420(1)	F.11

NOTE:

1. Repair all rills or gullies and properly compact prior to installation.
2. Install check dams in ditches perpendicular to the flowline.
3. Adjust check dam spacing based on site-specific conditions.

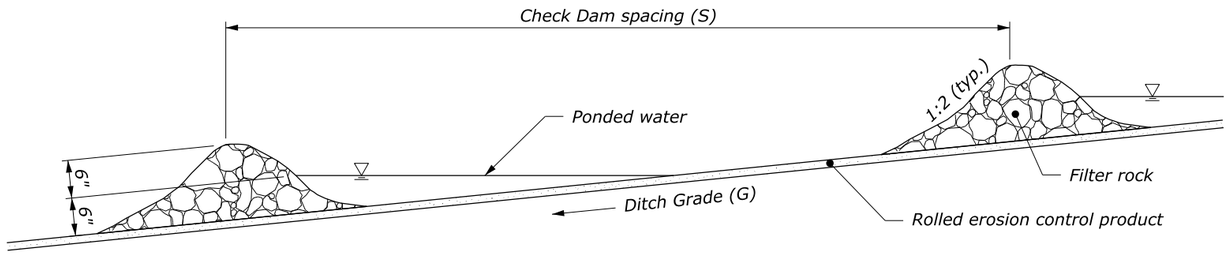

PROFILE VIEW

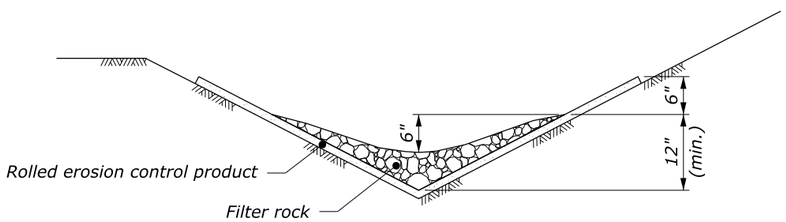

CROSS SECTION
V-DITCH

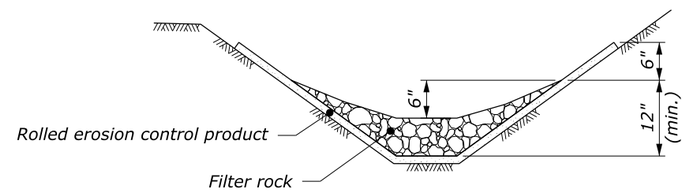

CROSS SECTION
FLAT-BOTTOM DITCH

FILTER ROCK CHECK DAM SPACING (See Note 3)	
DITCH GRADE (G)	MAX. CHECK DAM SPACING (S) (FT)
7%	40
8% and 9%	30
≥10%	20

FILTER ROCK CHECK DAM WITH ROLLED EROSION CONTROL PRODUCT

NO SCALE

U.S. DEPARTMENT OF TRANSPORTATION
FEDERAL HIGHWAY ADMINISTRATION
WESTERN FEDERAL LANDS HIGHWAY DIVISION

U.S. CUSTOMARY DETAIL

CHECK DAM WITH ROLLED EROSION CONTROL PRODUCT

DETAIL APPROVED FOR USE --/----
REVISED: 7/2016

DETAIL
W157-16

70% PLAN IN HAND 04-18-2017

27 January 2017 7:11 AM c:\myfiles\pw_production\d0203227\wa-a2013020_dj.dgn [USC]

STATE	PROJECT	SHEET NUMBER
WA	JEFF 91420(1)	F.12

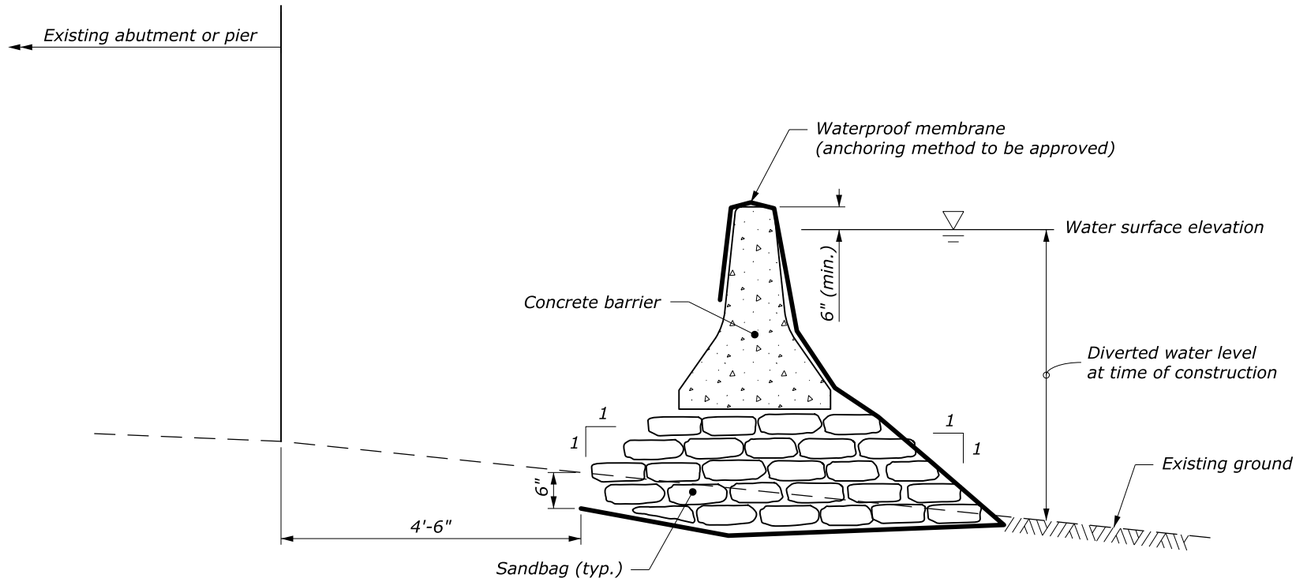

OPTION A

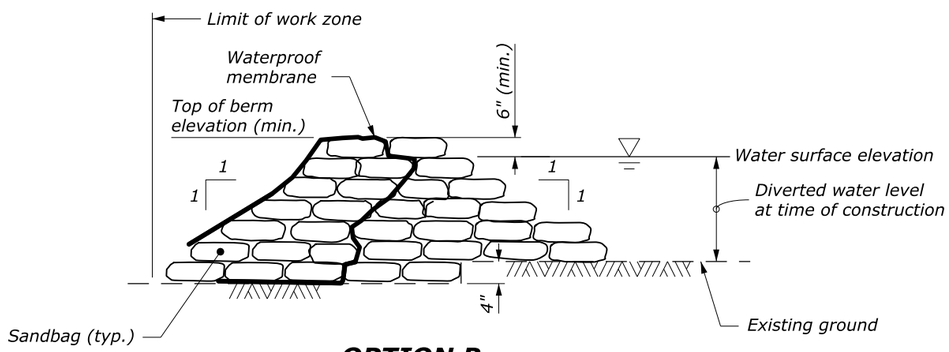

OPTION B

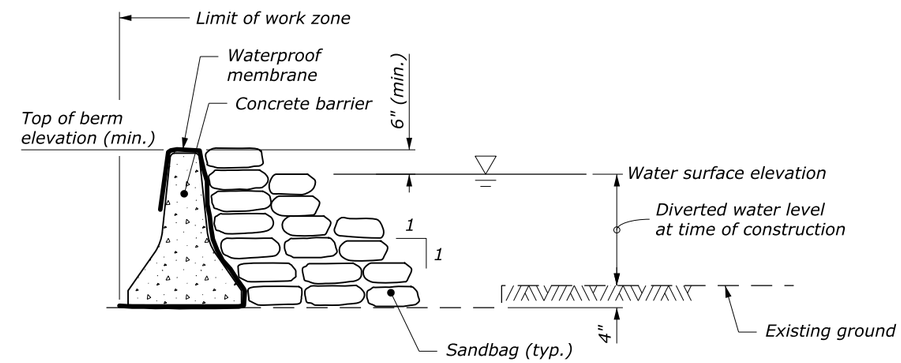

OPTION C

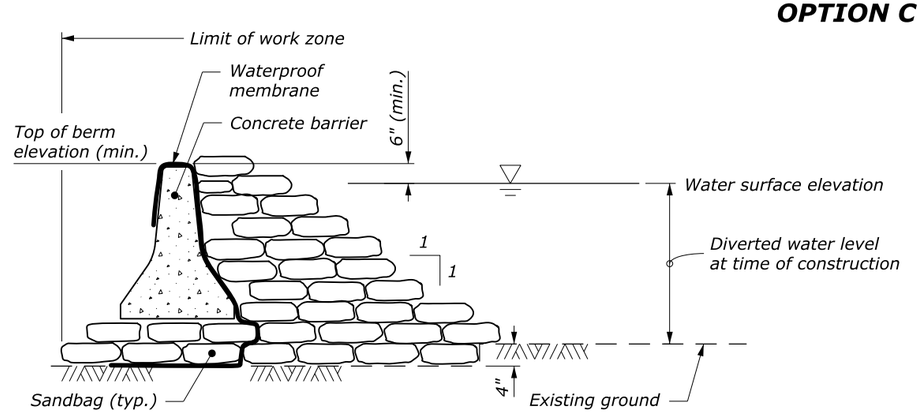

OPTION D

NOTE:

1. *These options suggest configurations for diverting a stream during construction operations. Alternate stream diversion methods may be chosen (including any approved prefabricated or portable diversion berms, dams, etc.). As a minimum, provide a temporary diversion berm with a minimum height equal to the water surface elevation with 6" (min.) freeboard. Submit temporary stream diversion plans for approval prior to installation.*
2. *Place sandbags to form a pyramid by laying equal numbers of bottom rows as there are vertical course. Overlap the upper rows of sandbags above the joints in lower rows.*
3. *Place a maximum of one diversion in the stream at any given time.*
4. *While in use, inspect and maintain the temporary diversion berm daily. Repair as needed after rainfall events or as directed. Remove sediment when deposits reach half the height of the sandbag barrier.*

NO SCALE

U.S. DEPARTMENT OF TRANSPORTATION
FEDERAL HIGHWAY ADMINISTRATION
WESTERN FEDERAL LANDS HIGHWAY DIVISION

U.S. CUSTOMARY DETAIL

TEMPORARY DIVERSION BERM METHODS

DETAIL APPROVED FOR USE --/----
REVISED: 7/2016

DETAIL
W157-17

70% PLAN IN HAND 04-18-2017

27 January 2017 7:11 AM c:\myfiles\pw_production\d0203227\wa-a2013020_dk.dgn [USC]

STATE	PROJECT	SHEET NUMBER
WA	JEFF 91420(1)	F.13

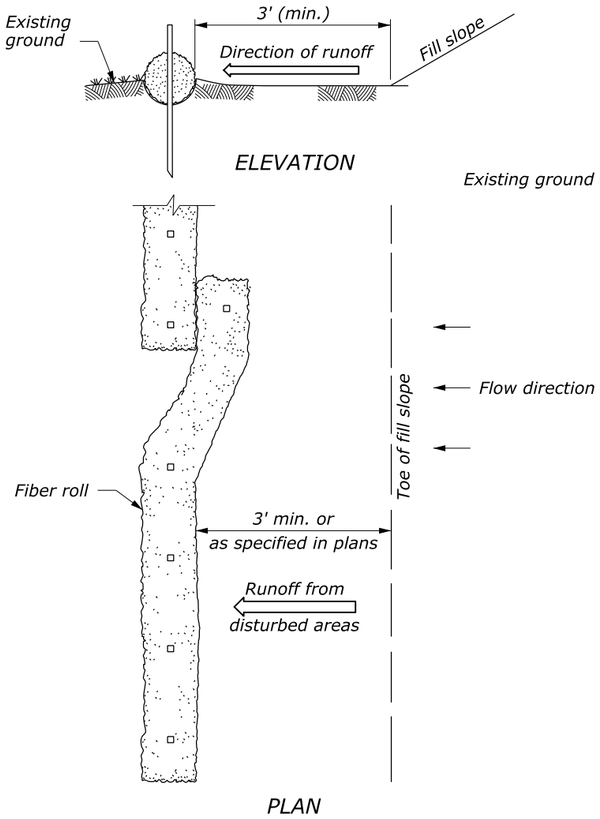

INSTALLATION BEYOND TOE OF SLOPE

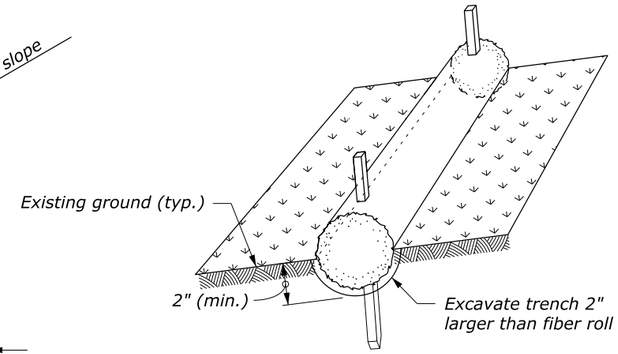

Step 1: Excavate trench and install fiber rolls

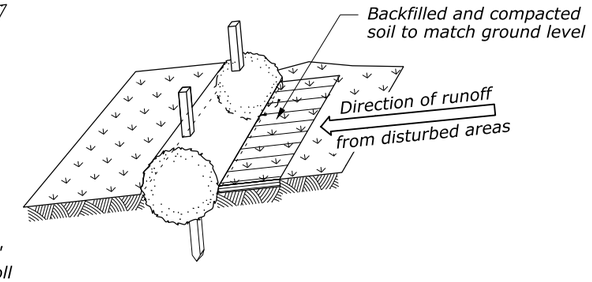

Step 2: Backfill soil against fiber rolls

PROPERLY STAKED AND ENTRENCHED FIBER ROLL

NOTE:

1. *Drive stakes at each end and at 4-foot spacing until fiber roll is secure to slope. Live stakes may be used for permanent installations. Do not crush fiber roll while staking.*
2. *Overlap fiber rolls 12-inch minimum. Drive stakes at 6-inches from fiber roll end angles towards the adjacent fiber roll and space stakes at 4-foot max.*

FIBER ROLL SPACING	
Slope	Spacing (FT)
1:4 or flatter	40
1:3	30
1:2	20
1:1	10

STAKES REQUIRED	
Fiber roll length (FT)	Stakes required for each roll
25	8
20	6
12	4

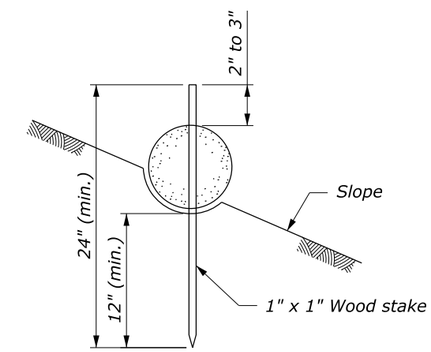

FIBER ROLL STAKING DETAIL

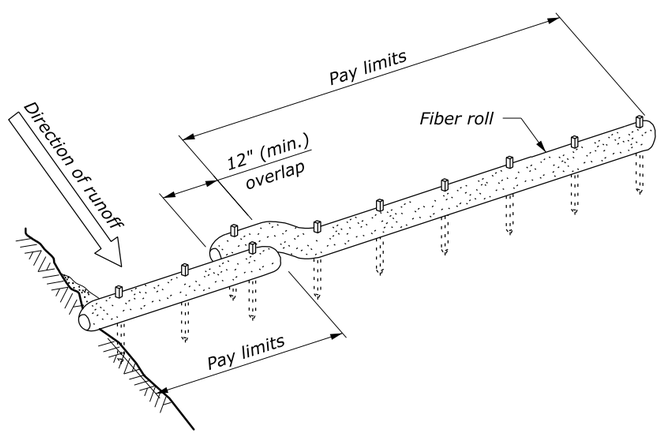

ALTERNATE FIBER ROLL JOINT DETAIL SLOPE PROTECTION INSTALLATION

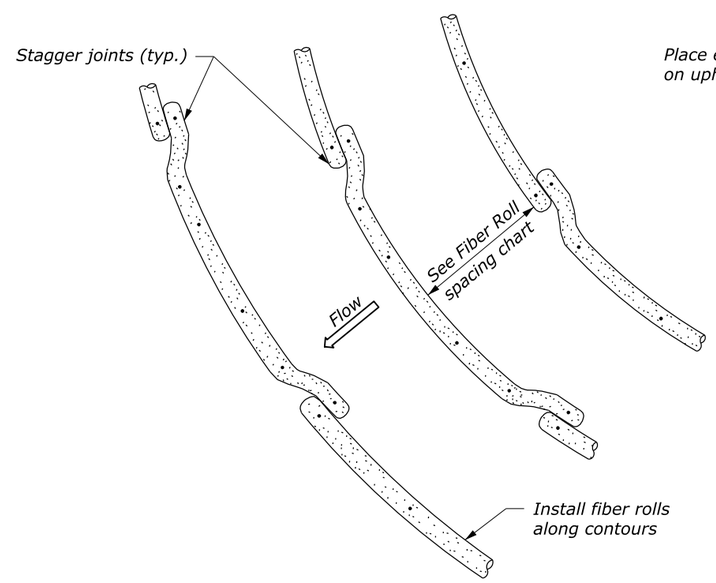

INSTALLATION ALONG SLOPES

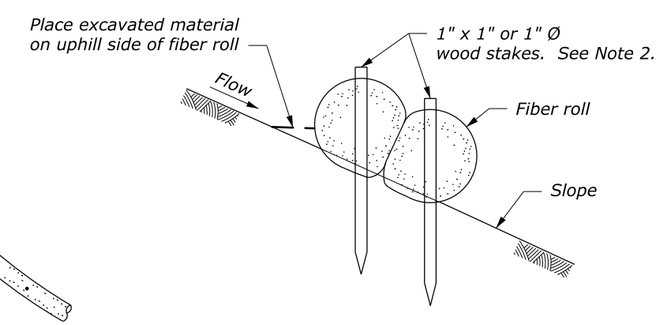

FIBER ROLL LAPPING DETAIL

NO SCALE

U.S. DEPARTMENT OF TRANSPORTATION
FEDERAL HIGHWAY ADMINISTRATION
WESTERN FEDERAL LANDS HIGHWAY DIVISION

U.S. CUSTOMARY DETAIL

FIBER ROLL

DETAIL APPROVED FOR USE 10/2014

REVISED:
DRAFT: 7/2016

DETAIL W157-21

70% PLAN IN HAND 04-18-2017

27 January 2017 7:11 AM c:\myfiles\pw_production\d0203227\wa-a2013020_dl.dgn [USC]

STATE	PROJECT	SHEET NUMBER
WA	JEFF 91420(1)	F.14

NOTE:

1. See Erosion Control Section for temporary culvert diameter, riprap class, channel dimensions and quantities.
2. Use plastic liner or riprap along the entire length and width of the temporary diversion channel.
3. Construct channel at a minimum grade of 0.5 percent.
4. Do not construct with longitudinal joints if using a plastic liner. Bury the upstream edge of the liner a minimum of 6" deep and secure with riprap or sandbags.
5. When specified replace the portion of the diversion channel through the roadway embankment with temporary culvert. Compact temporary culvert backfill using one of the methods listed in Subsection 204.11(a).

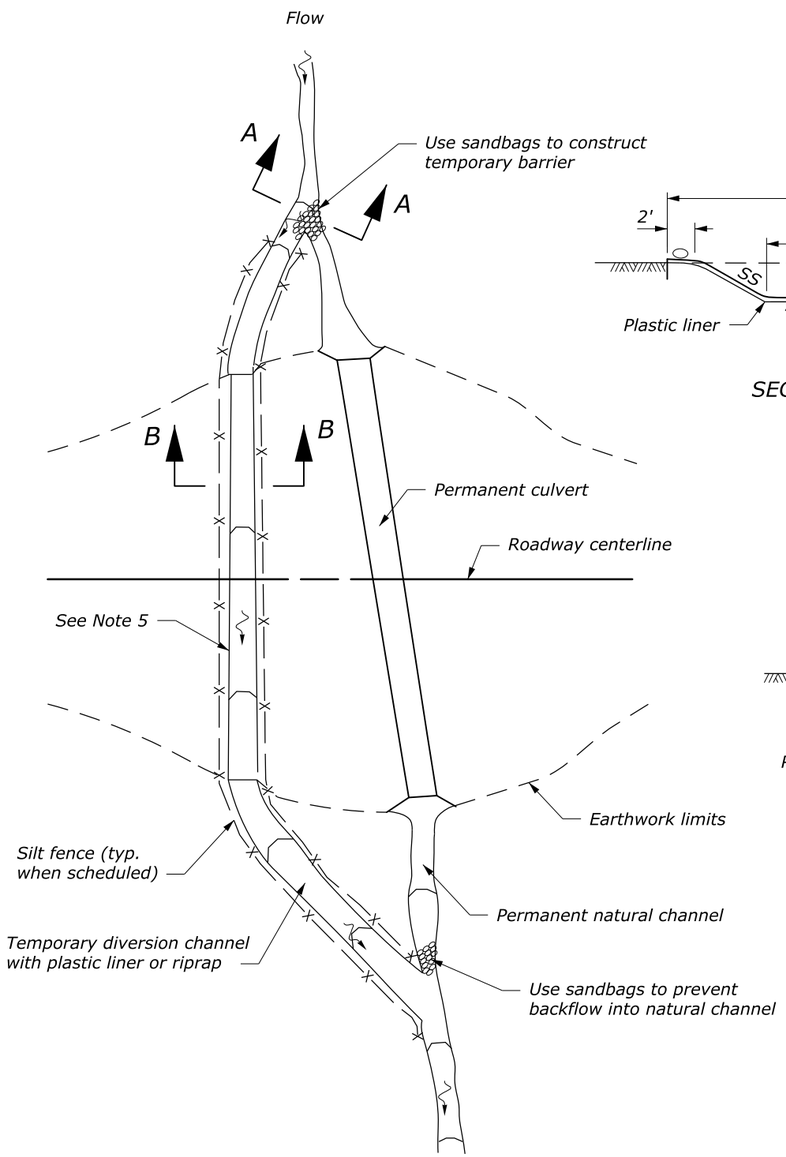

PLAN

DIVERSION CHANNEL

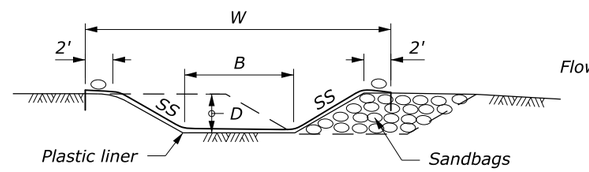

SECTION A-A

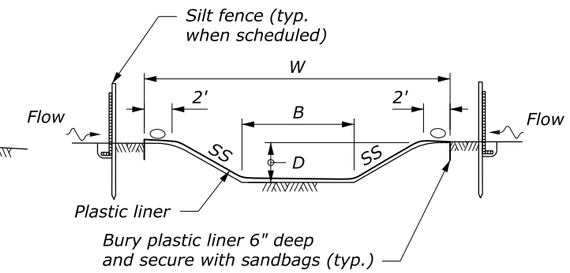

SECTION B-B

PLASTIC LINED DIVERSION CHANNEL

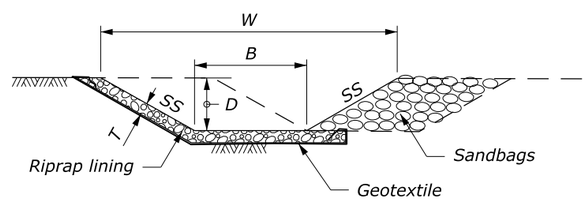

SECTION A-A

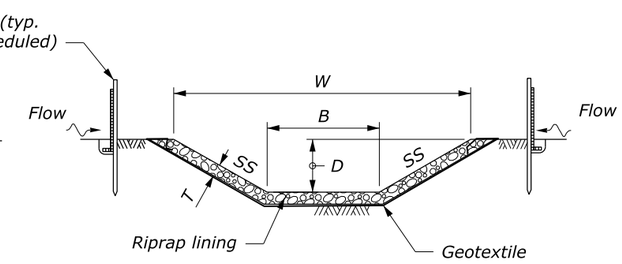

SECTION B-B

RIPRAP LINED DIVERSION CHANNEL

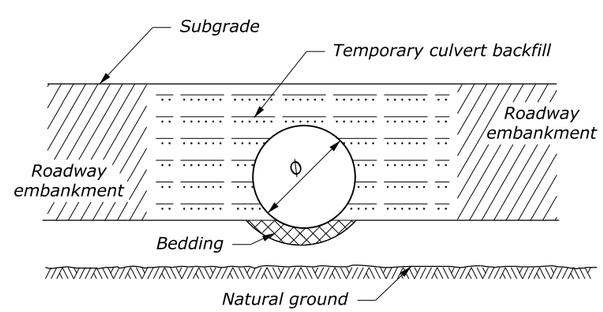

SECTION B-B

TEMPORARY CULVERT

NO SCALE

U.S. DEPARTMENT OF TRANSPORTATION
FEDERAL HIGHWAY ADMINISTRATION
FEDERAL LANDS HIGHWAY

U.S. CUSTOMARY STANDARD

TEMPORARY DIVERSION CHANNELS

STANDARD APPROVED FOR USE 6/2005
REVISED: 6/2007
DRAFT: 3/2014

STANDARD 157-5

70% PLAN IN HAND 04-18-2017

27 January 2017 7:12 AM c:\myfiles\pw_production\d0203227\wa-a2013020_dm..dgn [USC]

STATE	PROJECT	SHEET NUMBER
WA	JEFF 91420(1)	F.15

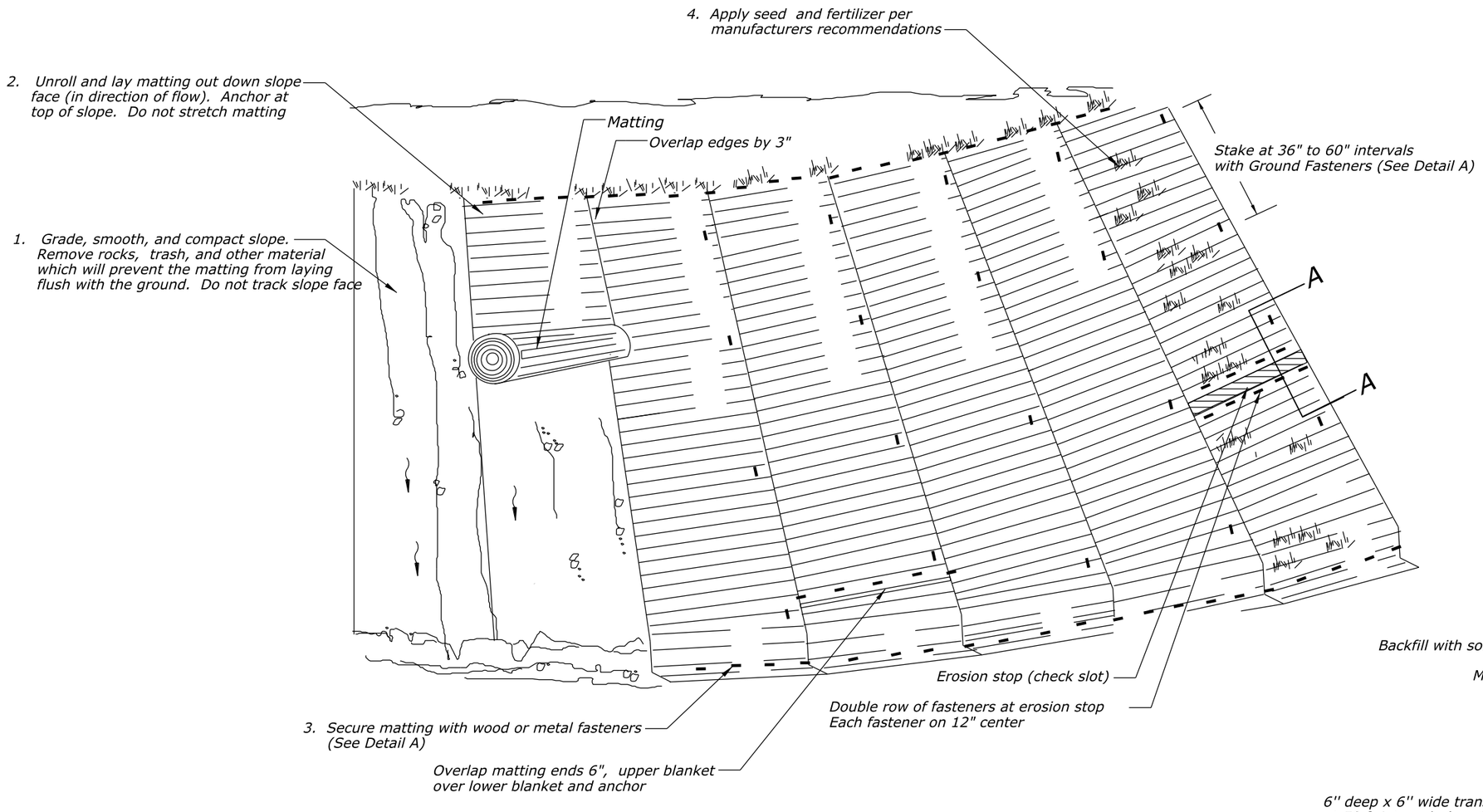

DETAIL FOR STABILIZING SLOPES WITH MATTING

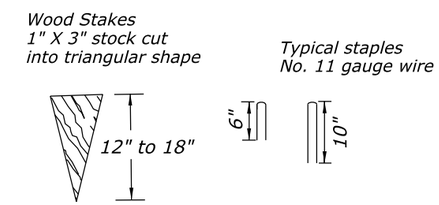

DETAIL A
Typical Ground Fasteners

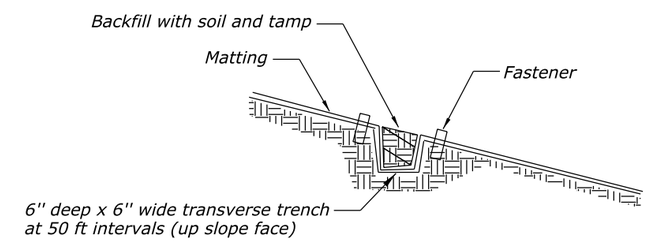

SECTION A-A
Erosion Stop (Check Slot) Detail

NO SCALE

U.S. CUSTOMARY DETAIL

SLOPE STABILIZATION WITH MATTING

DETAIL APPROVED FOR USE

APPROVED : MAY 2011
REVISED: SEPTEMBER 2014

DETAIL
E629-01

70% PLAN IN HAND 04-18-2017

Designed by: --/---- Checked by: --/----

27 January 2017 7:33 AM c:\myfiles\pw_production\d0203227\wa-a2013020_dn.dgn [US Customary]

REGION	STATE	PROJECT	SHEET NO.
PW	WA	WA JEFF 91420(1)	G.1

Bridge length = 120'-0"

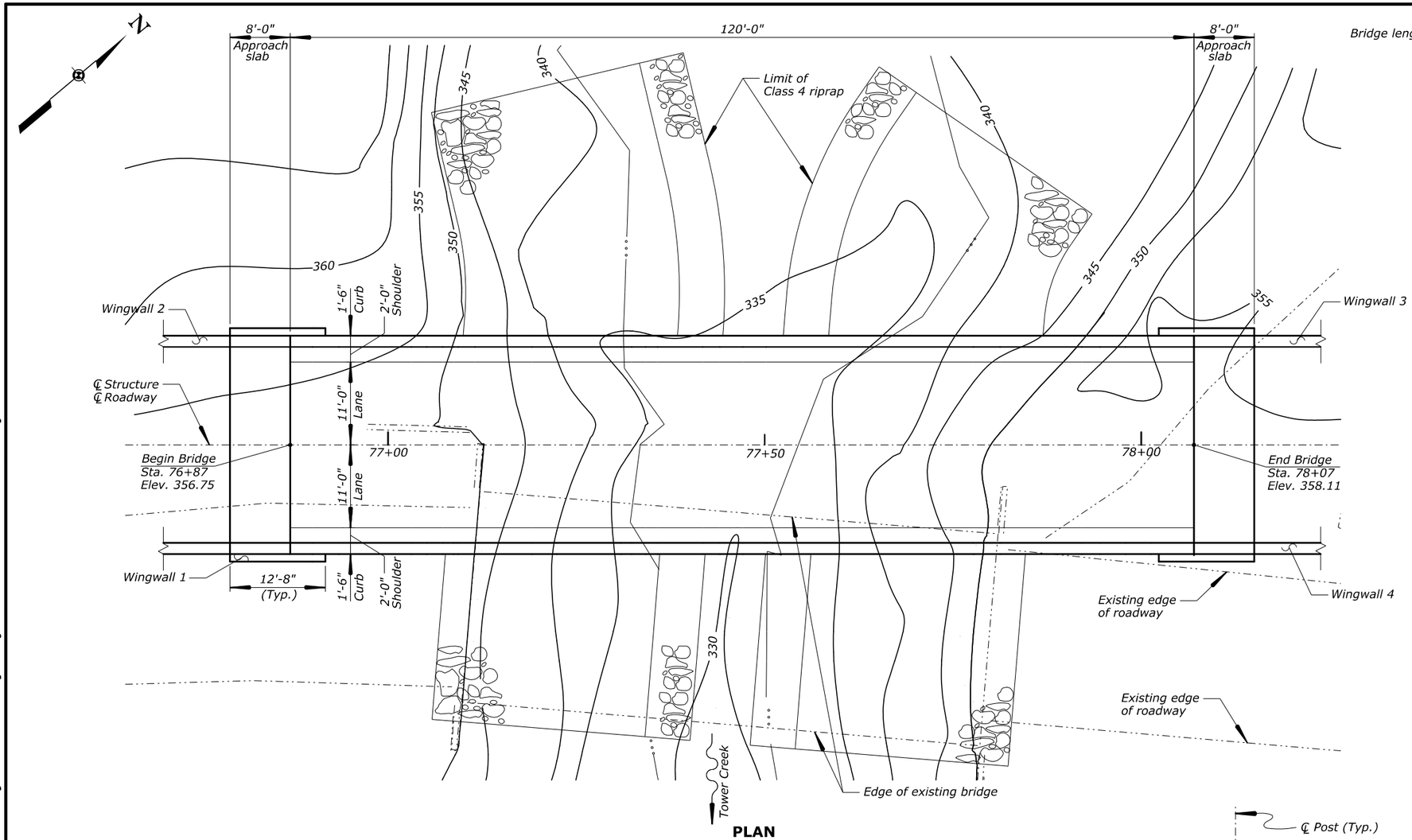

PLAN

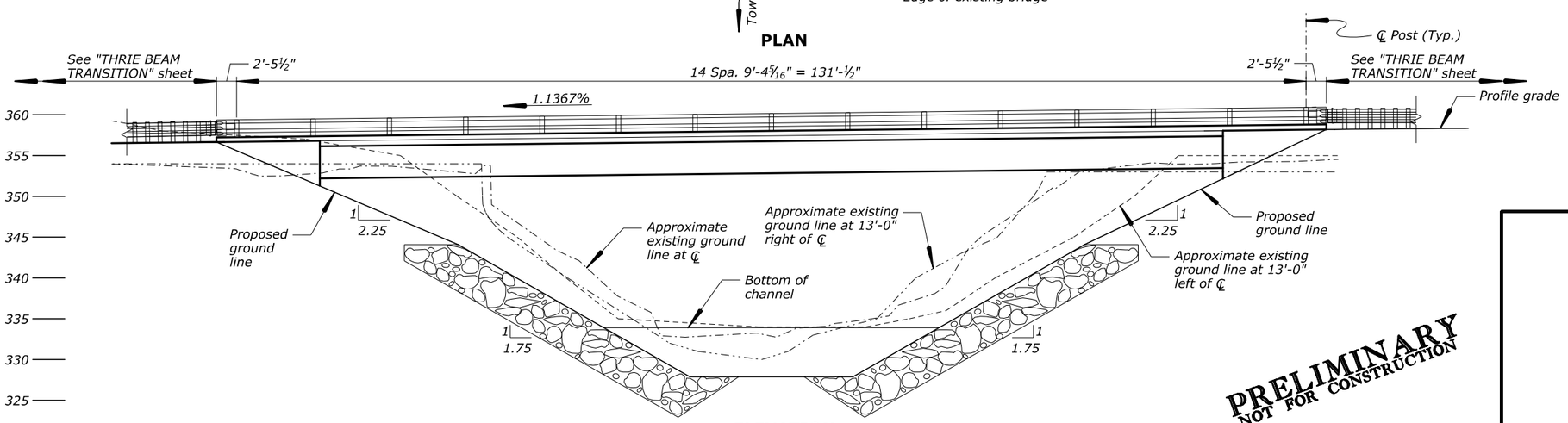

ELEVATION

PRELIMINARY
NOT FOR CONSTRUCTION

70% PLAN IN HAND 04-18-2017

U.S. DEPARTMENT OF TRANSPORTATION
FEDERAL HIGHWAY ADMINISTRATION
WESTERN FEDERAL LANDS HIGHWAY DIVISION

OLYMPIC NATIONAL PARK

TOWER CREEK BRIDGE

PLAN AND ELEVATION

NO.	DATE	BY	REVISIONS	NO.	DATE	BY	REVISIONS	DESIGNED BY	DRAWN BY	CHECKED BY	SCALE	PROJECT TEAM LEADER	BRIDGE DRAWING	DATE	DRAWING NO.
								AR	BSK		⅛" = 1'	George Choubah	1 of 18	March 2017	RG3105-A

ACTUAL FILE: PE_TOWER.DGN

M:\PROJECTS_ACCESS\WA\WA_JEFF_91420(1)\Bridge\Microstation\Bridge Design Files\Tower Creek\0_0PROJECTS.dgn

17-Mar-2017 10:45 AM

REGION	STATE	PROJECT	SHEET NO.
PW	WA	WA JEFF 91420(1)	G.2

GENERAL NOTES:

SPECIFICATIONS:

Construction:

Standard Specifications for Construction of Roads and Bridges on Federal Highway Projects, FP-14.

Design:

AASHTO LRFD Bridge Design Specifications, 2014, 7th Edition with 2015 Interim Revisions.

DESIGN LOADING:

Dead Loads:

Concrete: 150 pcf
Asphalt wearing surface: 25 psf
Future asphalt wearing surface: 25 psf

Live Loads:

AASHTO HL-93; maximum dynamic load allowance, IM=33%

MATERIALS:

Design stresses:

Class A(AE) Concrete:	f'c = 4,500 psi at 28 days
Class D(AE) Concrete:	f'c = 5,000 psi at 28 days
Class P (Prestressed) Concrete:	f'c = 10,000 psi at 28 days f'ci = 7,500 psi at time of release
Structural Steel:	fy = 50,000 psi
Reinforcing Steel:	fy = 60,000 psi
Prestressing Steel:	fs = 270,000 psi

Concrete:

Furnish Class P (Prestressed) concrete for precast decked bulb tees.
Furnish Class D(AE) concrete for approach slabs, curbs, diaphragms, and endwalls.
Furnish Class A(AE) concrete for all other concrete.

Chamfer exposed edges of all concrete ¾" unless otherwise noted.

Furnish flexible cellular joint filler meeting the requirments of ASTM D1056, Type 2, grade 4 or 5.

Furnish preformed expansion material meeting the requirments of AASHTO M 213.

Reinforcing steel:

Furnish reinforcing steel conforming to AASHTO M 31 or M 322, grade 60 deformed.

Provide epoxy coated reinforcing steel for girders and all reinforcing steel located or anchored in Class D(AE) concrete unless otherwise noted.

Provide standard hooks as defined by ACI SP-66 for bends unless otherwise noted.

Provide 2" cover for reinforcing steel unless otherwise noted.

Prestressing steel:

Furnish grade 270, 0.60" diameter, seven-wire, low-relaxation, prestressing steel conforming to AASHTO M 203.

Pre-tension each strand to a total load of 43,940 lb (f'si = 0.75*f's = 202,500 psi).

The final estimated effective prestress force per strand is 38,840 lb based on estimated losses of 23.48 ksi.

Bearings:

Provide laminated elastomeric bearing pads conforming to the requirements of Section 18.2 of the AASHTO LFRD Bridge Construction Specifications, with 60 durometer hardness. Bearings are designed according to AASHTO LRFD design method A.

GEOTECHNICAL REPORT:

For boring logs and other geotechnical information, see Geotechnical Memorandum No. 20-16, dated 07-2016.

ESTIMATE OF QUANTITIES

ITEM NO.	ITEM	QUANTITY	UNIT	NOTES
20304-2000	Removal of Bridge	1	LPSM	
20801-0000	Structure Excavation	85	CUYD	
20803-0000	Structure Backfill	200	CUYD	
40301-0100	Asphalt Concrete Pavement, Type 1	45	TON	
55101-0200	Concrete Filled Steel Pipe Piles, In Place (24-Inch Diameter x 0.75-Inch)	785	LNFT	
55104-0000	Dynamic Pile Load Test	2	EACH	
55201-0200	Structural Concrete, Class A(AE)	45	CUYD	
55201-0800	Structural Concrete, Class D(AE)	40	CUYD	
55202-2000	Structural Concrete, Class D (AE), For Approach Slabs, Type 2	55	SQYD	
55302-2700	Precast, Prestressed Concrete Deck Bulb Tee Girders, 53-Inch	595	LNFT	
55401-1000	Reinforcing Steel	6,300	LB	
55401-2000	Reinforcing Steel, Epoxy Coated	3,500	LB	
55601-1100	Bridge Railing, Steel, Two Rail	356	LNFT	
55901-0000	Membrane Waterproofing	350	SQYD	
56401-1000	Bearing Device, Elastomeric	10	EACH	

DRAWING INDEX

DRAWING NO.	DRAWING TITLE
RG3105-A	Plan and Elevation
RG3105-B	General Notes
RG3105-C	Foundation Layout
RG3105-D	Abutment Layout
RG3105-E	Abutment Endwall
RG3105-F	Abutment Wingwall
RG3105-G	Typical Section and Framing Plan
RG3105-H	Exterior Girder
RG3105-I	Interior Girder
RG3105-J	Girder Sections
RG3105-K	Exterior Girder Top Flange
RG3105-L	Interior Girder Top Flange
RG3105-M	Girder Details
RG3105-N	Bridge Railing
RG3105-O	Thrie Beam Transition
RG3105-P	Reinforcing Steel Bar List
RG3105-Q	Epoxy Coated Reinforcing Steel Bar List
RG3105-R	Approach Slab Details

PRELIMINARY
NOT FOR CONSTRUCTION

U.S. DEPARTMENT OF TRANSPORTATION
FEDERAL HIGHWAY ADMINISTRATION
WESTERN FEDERAL LANDS HIGHWAY DIVISION

OLYMPIC NATIONAL PARK

TOWER CREEK BRIDGE

GENERAL NOTES

NO.	DATE	BY	REVISIONS	NO.	DATE	BY	REVISIONS	DESIGNED BY	DRAWN BY	CHECKED BY	SCALE	PROJECT TEAM LEADER	BRIDGE DRAWING	DATE	DRAWING NO.
								AR	AR		No Scale	George Choubah	2 of 18	March 2017	RG3105-B

70% PLAN IN HAND 04-18-2017
M:\PROJECTS_ACCESS\WA\WA_JEFF_91420(1)\Bridge\Microstation\Bridge Design Files\Tower Creek\0_OPROJECTS.dgn
12-Apr-2017 10:04 AM
M02 MT 210(1) GN.DGN

REGION	STATE	PROJECT	SHEET NO.
PW	WA	WA JEFF 91420(1)	G.3

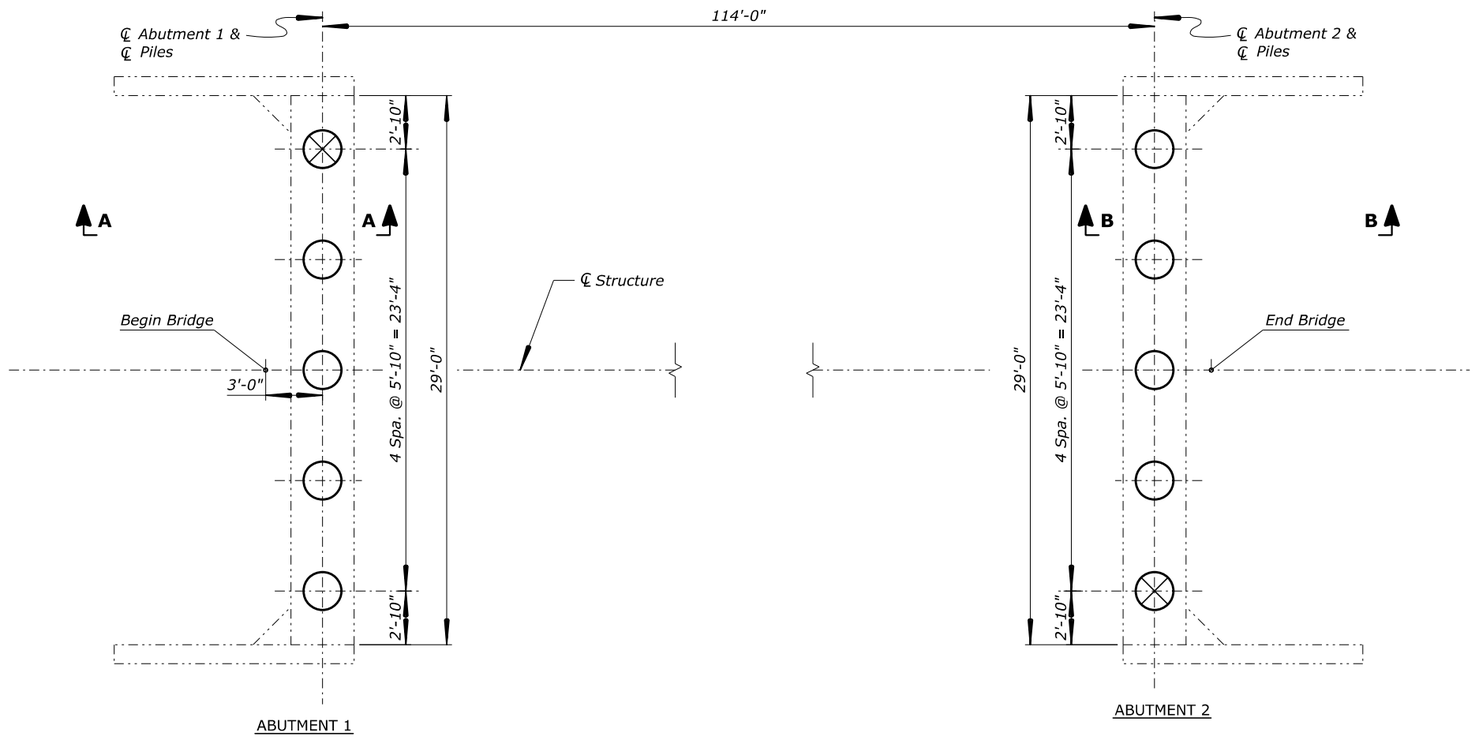

FOUNDATION PLAN

Notes:

1. ◯ Indicates pile location.
2. ⊗ Indicates Dynamic Load Test location.

PILE DRIVING INFORMATION

LOCATION	RESISTANCE FACTOR	REQUIRED COMPRESSIVE NOMINAL BEARING RESISTANCE (kips/pile)*	ESTIMATED TOTAL LENGTH OF PILES
Abut. 1	0.65	260	77.55 ft
Abut. 2	0.65	260	78.75 ft

* Drive piles to the required compressive nominal bearing resistance

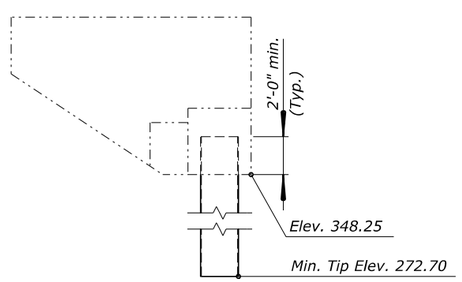

SECTION A-A

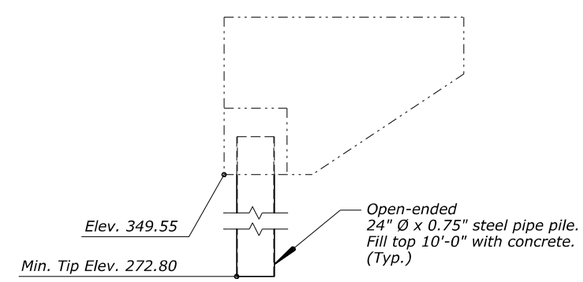

SECTION B-B

PRELIMINARY
NOT FOR CONSTRUCTION

70% PLAN IN HAND 04-18-2017

U.S. DEPARTMENT OF TRANSPORTATION
FEDERAL HIGHWAY ADMINISTRATION
WESTERN FEDERAL LANDS HIGHWAY DIVISION

OLYMPIC NATIONAL PARK

TOWER CREEK BRIDGE

FOUNDATION LAYOUT

NO.	DATE	BY	REVISIONS	NO.	DATE	BY	REVISIONS	DESIGNED BY	DRAWN BY	CHECKED BY	SCALE	PROJECT TEAM LEADER	BRIDGE DRAWING	DATE	DRAWING NO.
								AR	BSK		¼" = 1'	George Choubah	3 of 18	March 2017	RG3105-C

ACTUAL FILE: FL .DGN
M:\PROJECTS_ACCESS\WA\WA_JEFF_91420(1)\Bridge\Microstation\Bridge Design Files\Tower Creek\0_0PROJECTS.dgn
17-Mar-2017 10:22 AM

REGION	STATE	PROJECT	SHEET NO.
PW	WA	WA JEFF 91420(1)	G.4

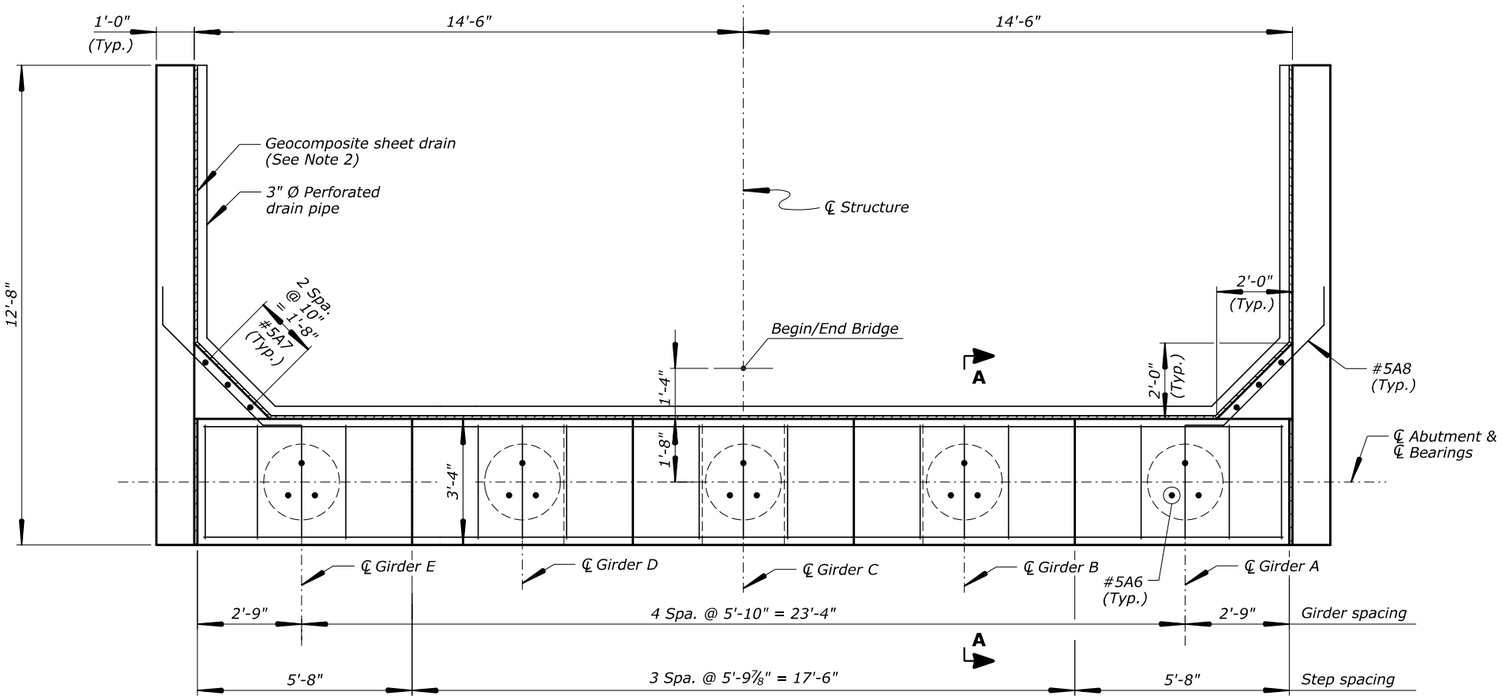

PLAN
Scale: ½" = 1'
(Abutment 1 shown, Abutment 2 similar)

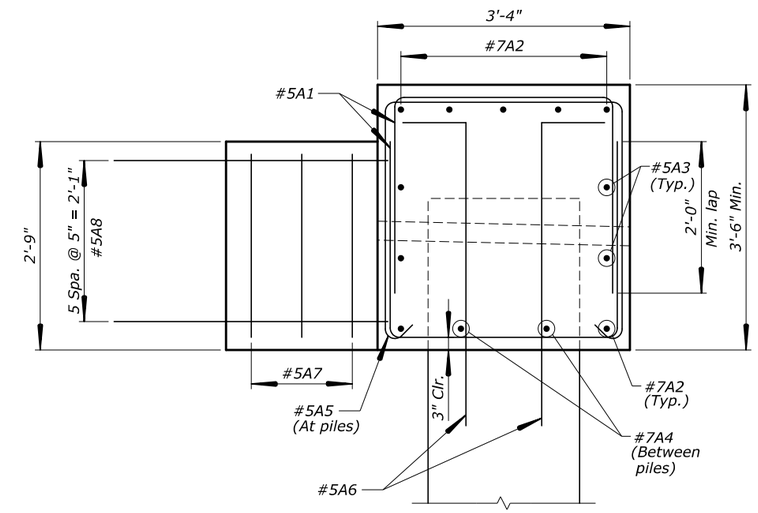

SECTION A-A
Scale: 1" = 1'

BEARING SEAT ELEVATIONS

GIRDER	ABUT. 1	ABUT. 2
A	351.75	353.05
B	351.87	353.16
C	351.92	353.28
D	351.87	353.16
E	351.75	353.05

Notes:

1. *See "ABUTMENT WINGWALL" sheet for wingwall details and elevations.*
2. *Install continuous geocomposite sheet drain and 3" dia. perforated drain pipe behind wingwalls and abutment. Cap ends of pipe. Tie perforated wingwall pipes to perforated abutment pipe and daylight through weep holes at face of abutment.*
3. *Cast shear block after girders have been set. Roughen surface of cap at shear block locations. See "ABUTMENT WINGWALL" sheet for details.*

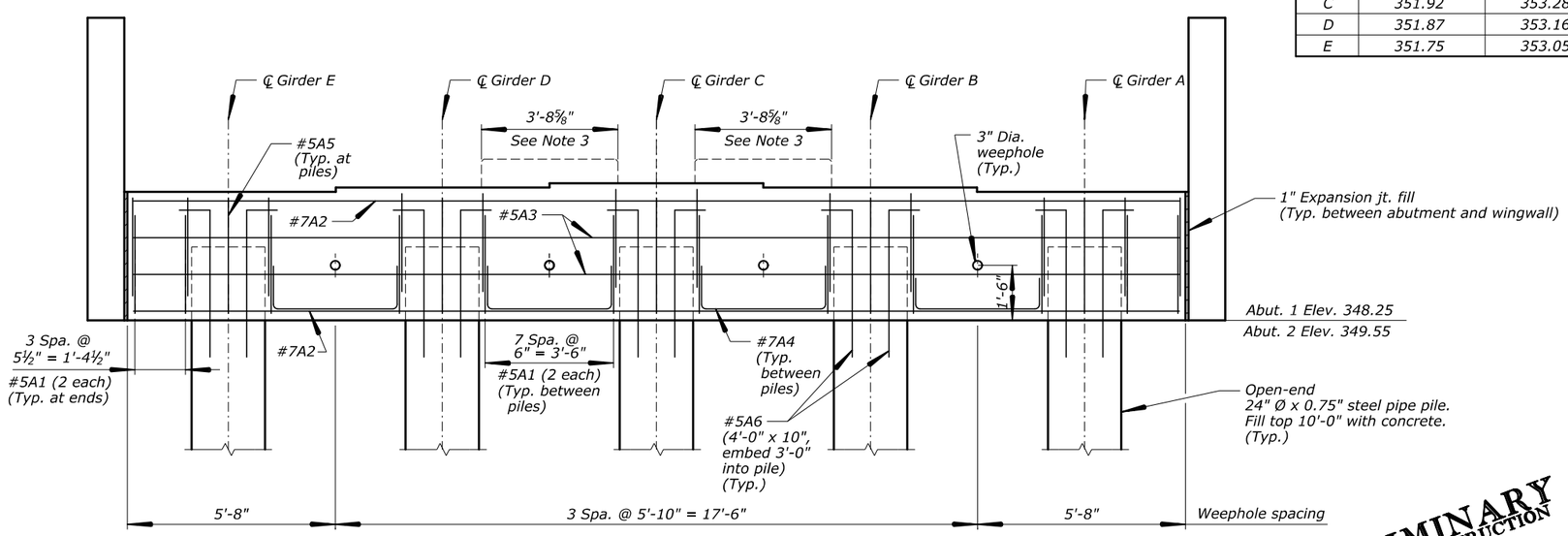

ELEVATION
Scale: ½" = 1'
(Abutment 1 shown, Abutment 2 similar)

PRELIMINARY
NOT FOR CONSTRUCTION

U.S. DEPARTMENT OF TRANSPORTATION
FEDERAL HIGHWAY ADMINISTRATION
WESTERN FEDERAL LANDS HIGHWAY DIVISION

OLYMPIC NATIONAL PARK

TOWER CREEK BRIDGE

ABUTMENT LAYOUT

NO.	DATE	BY	REVISIONS	NO.	DATE	BY	REVISIONS	DESIGNED BY	DRAWN BY	CHECKED BY	SCALE	PROJECT TEAM LEADER	BRIDGE DRAWING	DATE	DRAWING NO.
								AR	BSK		As Shown	George Choubah	4 of 18	March 2017	RG3105-D

70% PLAN IN HAND 04-18-2017

ACTUAL FILE: ABUT LAYOUT.DGN

M:\PROJECTS_ACCESS\WA\WA_JEFF_91420(1)\Bridge\Microstation\Bridge Design Files\Tower Creek\0_0PROJECTS.dgn

17-Mar-2017 10:22 AM

REGION	STATE	PROJECT	SHEET NO.
PW	WA	WA JEFF 91420(1)	G.5

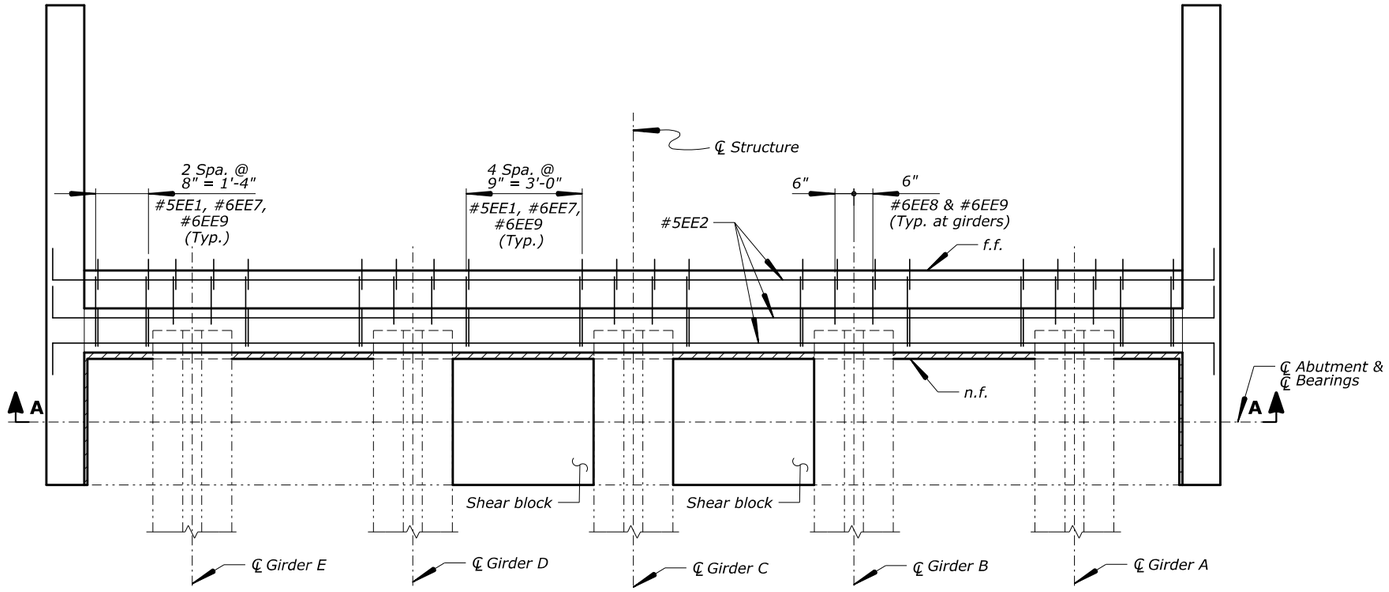

PLAN
Scale: ½" = 1'
(Abutment 1 shown, Abutment 2 similar)

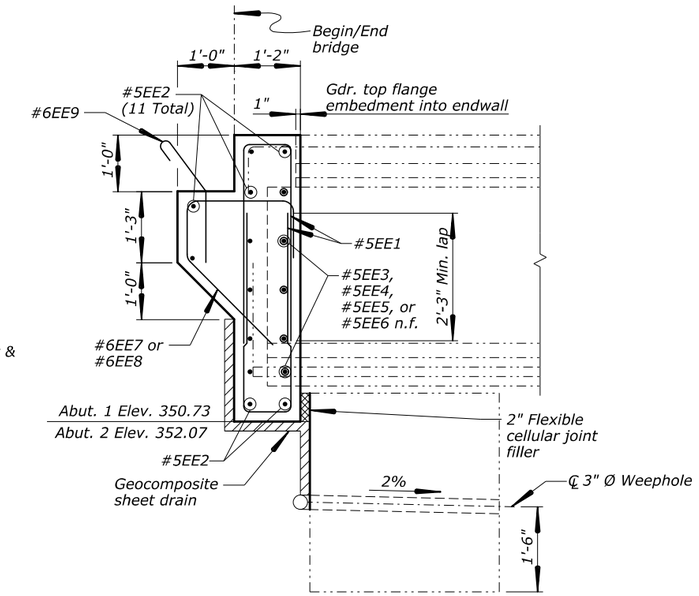

SECTION B-B
Scale: ¾" = 1'-0"

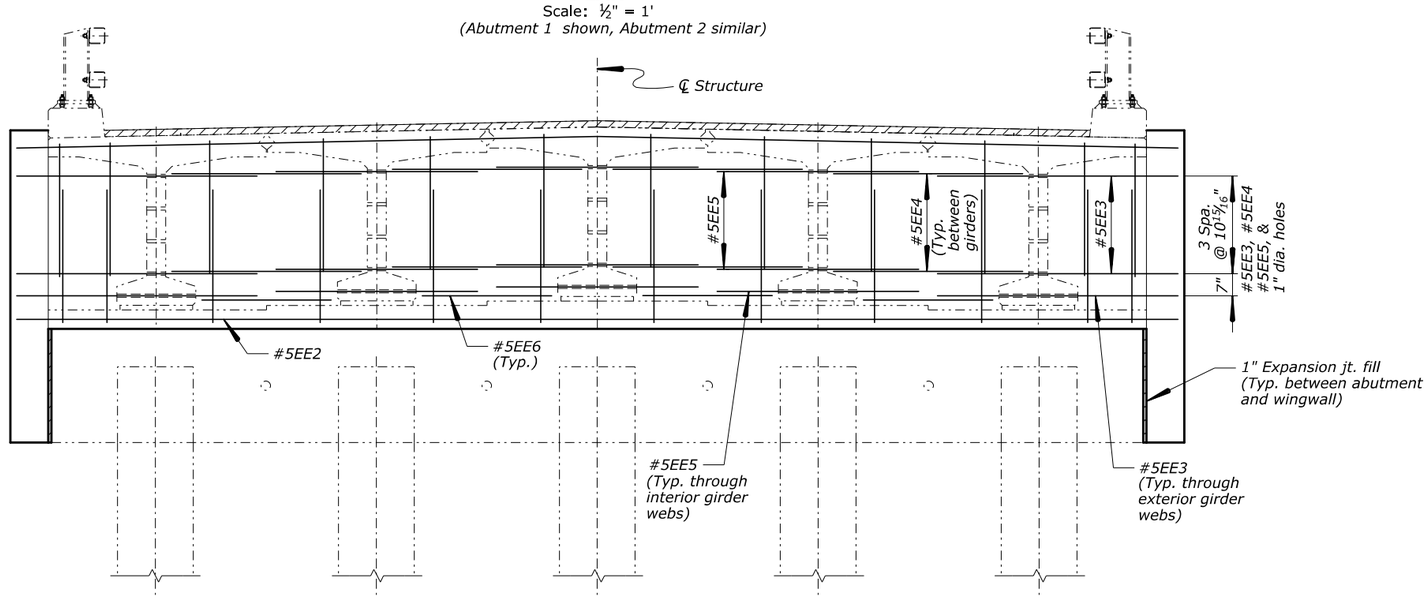

VIEW A-A
Scale: ½" = 1'
(Abutment 1 shown, Abutment 2 similar)

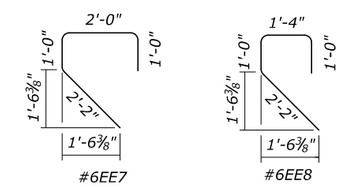

Key:
n.f. = near face
f.f. = far face
e.f. = each face

70% PLAN IN HAND 04-18-2017

PRELIMINARY NOT FOR CONSTRUCTION

U.S. DEPARTMENT OF TRANSPORTATION
FEDERAL HIGHWAY ADMINISTRATION
WESTERN FEDERAL LANDS HIGHWAY DIVISION

OLYMPIC NATIONAL PARK

TOWER CREEK BRIDGE

ABUTMENT ENDWALL

NO.	DATE	BY	REVISIONS	NO.	DATE	BY	REVISIONS	DESIGNED BY	DRAWN BY	CHECKED BY	SCALE	PROJECT TEAM LEADER	BRIDGE DRAWING	DATE	DRAWING NO.
								AR	BSK		As Shown	George Choubah	5 of 18	March 2017	RG3105-E

M:\PROJECTS_ACCESS\WAWA_JEFF_91420(1)\Bridge\Microstation\Bridge Design Files\Tower Creek\O_OPRODETAILS.DGN
17-Mar-2017 10:22 AM
FILE: ABUT ENDWALL.DGN

REGION	STATE	PROJECT	SHEET NO.
PW	WA	WA JEFF 91420(1)	G.6

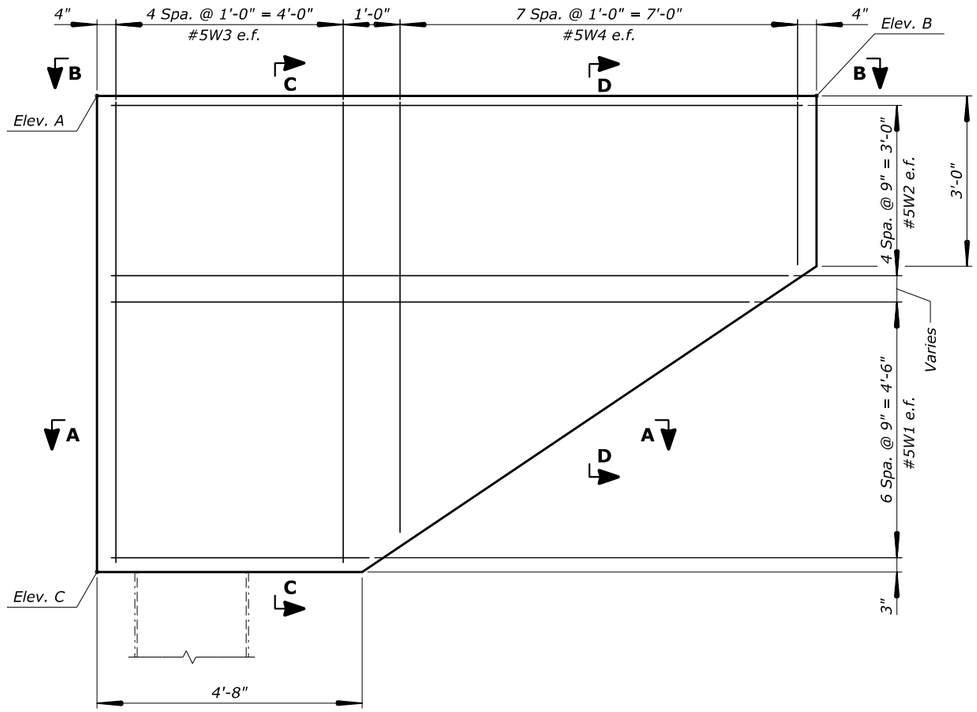

ELEVATION
Scale: ¾" = 1'-0"

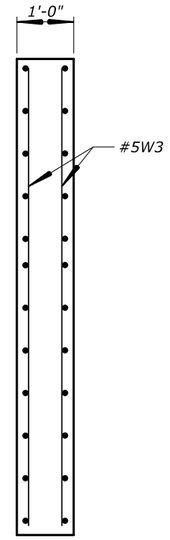

SECTION C-C
Scale: ¾" = 1'-0"

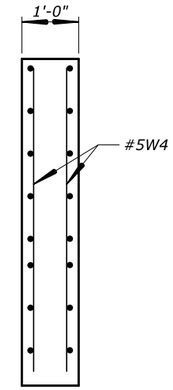

SECTION D-D
Scale: ¾" = 1'-0"

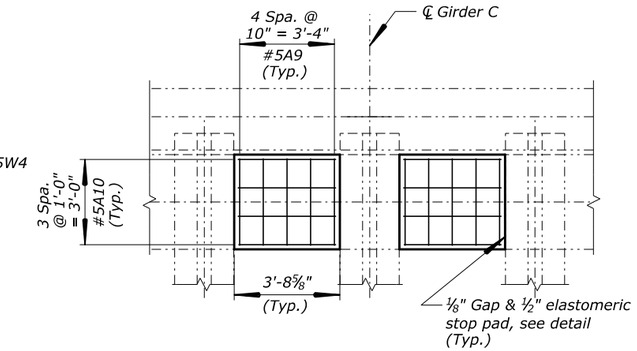

SHEAR BLOCK PLAN
Scale: ⅜" = 1'-0"

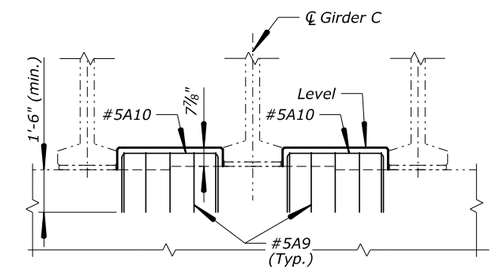

SHEAR BLOCK ELEVATION
Scale: ⅜" = 1'-0"

ELEVATIONS		
ELEV.	WING. 1 & 2	WING. 3 & 4
A	356.51	357.77
B	356.37	357.91
C	348.25	349.55

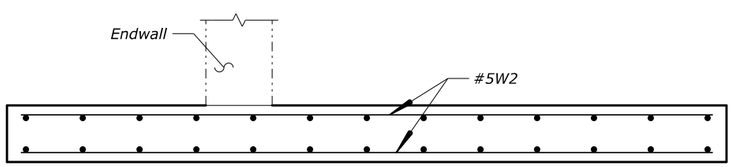

SECTION B-B
Scale: ¾" = 1'-0"

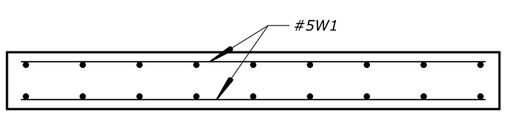

SECTION A-A
Scale: ¾" = 1'-0"

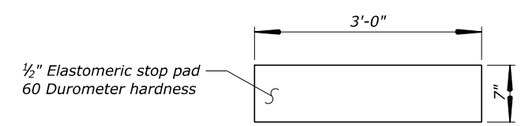

ELASTOMERIC STOP PAD DETAIL
No Scale
(8 req'd)

Notes:

1. *Cast concrete for shear blocks after placement of girders.*
2. *Place elastomeric pads after constructing shear blocks. Coat pads with approved cementitions adhesive prior to installation.*

Key:
n.f. = near face
f.f. = far face
e.f. = each face

PRELIMINARY
NOT FOR CONSTRUCTION

U.S. DEPARTMENT OF TRANSPORTATION
FEDERAL HIGHWAY ADMINISTRATION
WESTERN FEDERAL LANDS HIGHWAY DIVISION

OLYMPIC NATIONAL PARK

TOWER CREEK BRIDGE

ABUTMENT WINGWALL

NO.	DATE	BY	REVISIONS	NO.	DATE	BY	REVISIONS	DESIGNED BY	DRAWN BY	CHECKED BY	SCALE	PROJECT TEAM LEADER	BRIDGE DRAWING	DATE	DRAWING NO.
								AR	BSK		As Shown	George Choubah	6 of 18	March 2017	RG3105-F

70% PLAN IN HAND 04-18-2017
ACTUAL FILE: ABUT WINGWALL.DGN
M:\PROJECTS_ACCESS\WA\WA_JEFF_91420(1)\Bridge\Microstation\Bridge Design Files\Tower Creek\0_0PROJECTS.dgn
17-Mar-2017 10:23 AM

REGION	STATE	PROJECT	SHEET NO.
PW	WA	WA JEFF 91420(1)	G.7

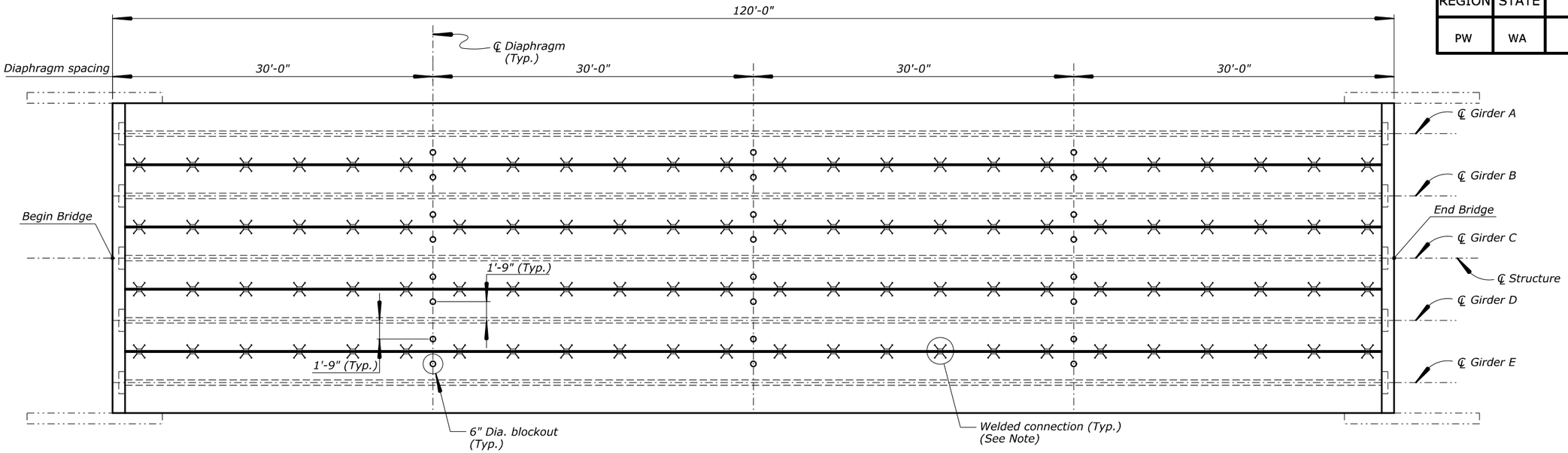

FRAMING PLAN
Scale: 3/16" = 1'

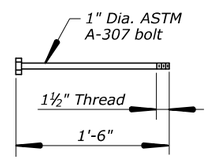

DIAPHRAGM ANCHOR BOLT
No Scale

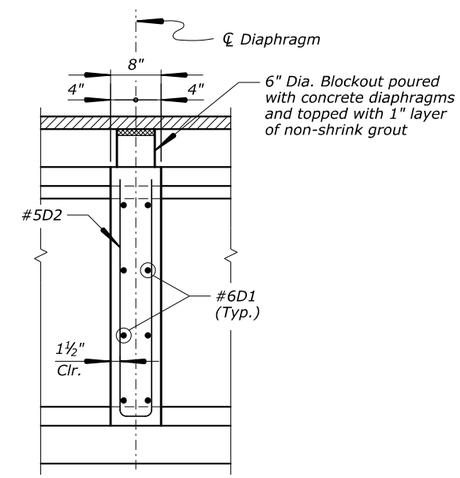

SECTION A-A
Scale: 1" = 1'

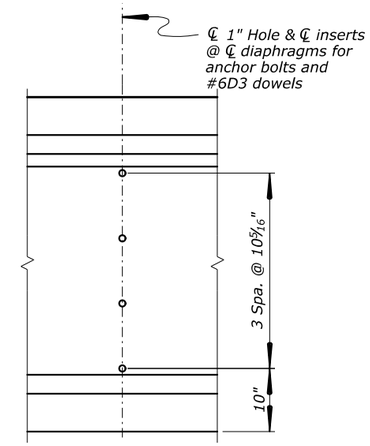

GIRDER PARTIAL ELEVATION
Scale: 1" = 1'

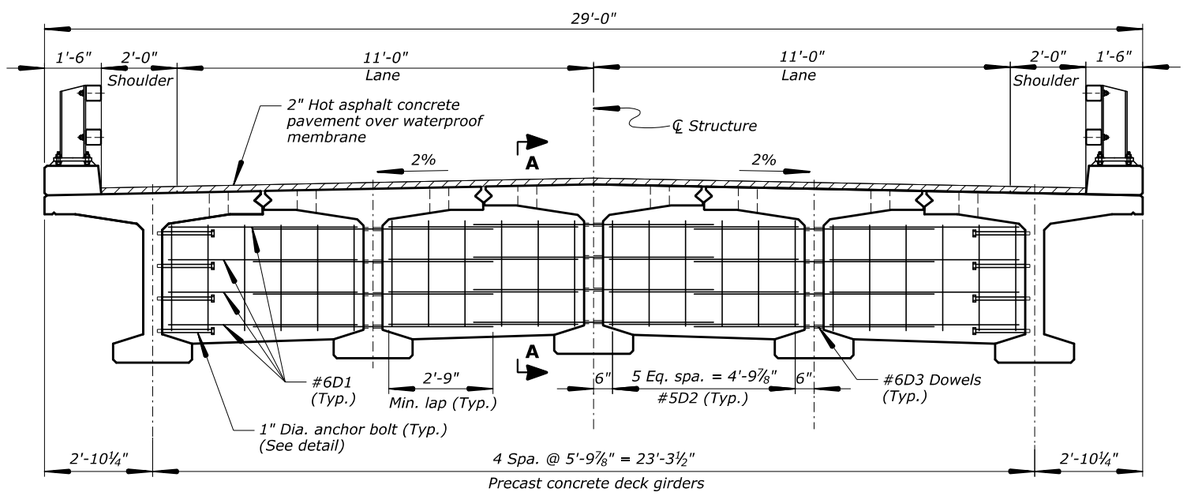

TYPICAL SECTION
Scale: ½" = 1'

Note:

See "GIRDER DETAILS" sheet for welded connection details. See "EXTERIOR GIRDER TOP FLANGE" and "INTERIOR GIRDER TOP FLANGE" sheets for welded connection spacing.

PRELIMINARY NOT FOR CONSTRUCTION

U.S. DEPARTMENT OF TRANSPORTATION
FEDERAL HIGHWAY ADMINISTRATION
WESTERN FEDERAL LANDS HIGHWAY DIVISION

OLYMPIC NATIONAL PARK

TOWER CREEK BRIDGE

TYPICAL SECTION AND FRAMING PLAN

70% PLAN IN HAND 04-18-2017

NO.	DATE	BY	REVISIONS	NO.	DATE	BY	REVISIONS	DESIGNED BY	DRAWN BY	CHECKED BY	SCALE	PROJECT TEAM LEADER	BRIDGE DRAWING	DATE	DRAWING NO.
								AR	BSK		As Shown	George Choubah	7 of 18	March 2017	RG3105-G

ACTUAL FILE: TYPXS.DGN
M:\PROJECTS_ACCESS\WA\WA_JEFF_91420(1)\Bridge\Microstation\Bridge Design Files\Tower Creek\0_0PROJECTS.dgn
17-Mar-2017 10:23 AM

REGION	STATE	PROJECT	SHEET NO.
PW	WA	WA JEFF 91420(1)	G.8

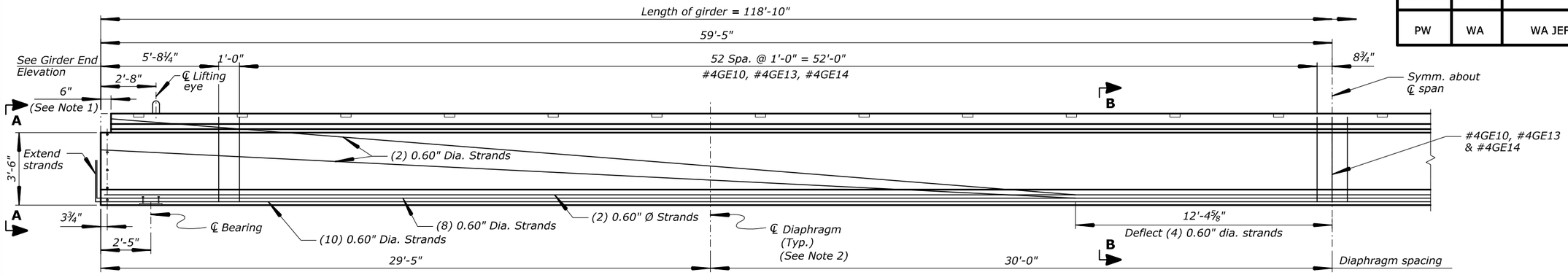

HALF GIRDER ELEVATION

Scale: ⅜" = 1'

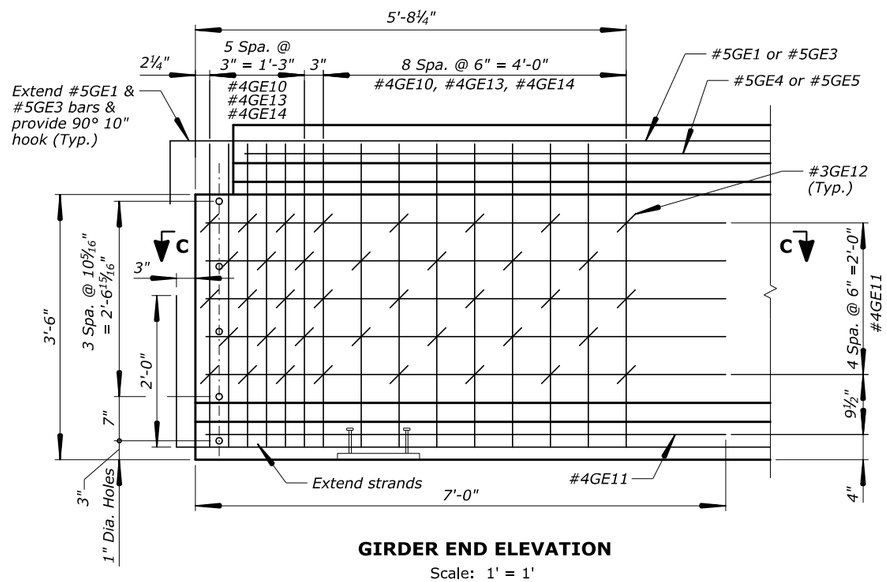

GIRDER END ELEVATION

Scale: 1' = 1'

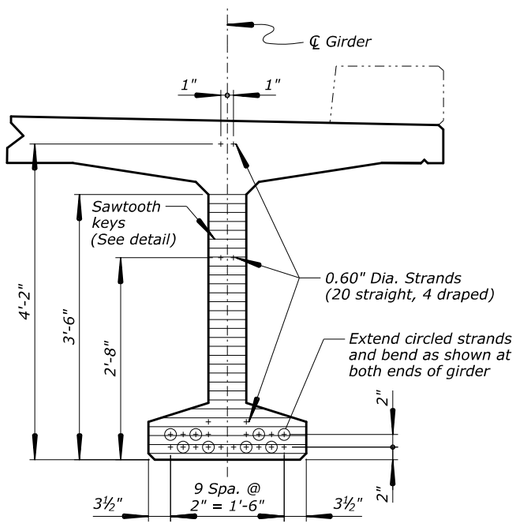

VIEW A-A

Scale: 1' = 1'

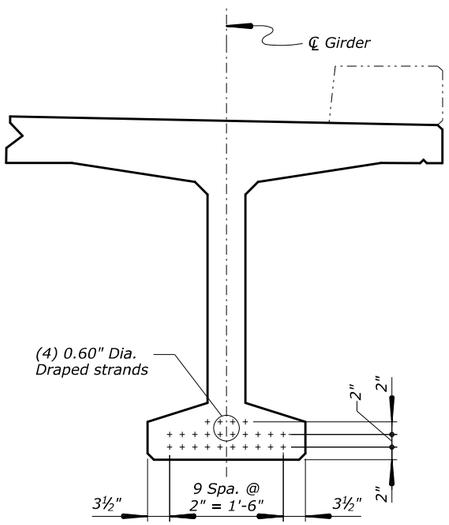

SECTION B-B

Scale: 1' = 1'

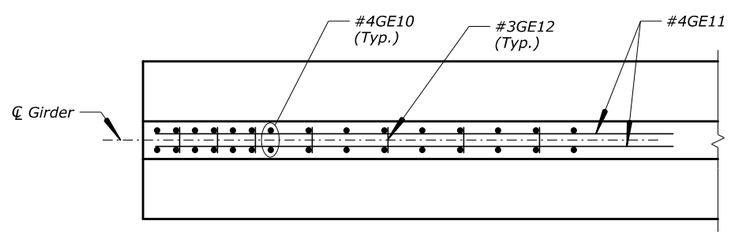

SECTION C-C

Scale: 1' = 1'

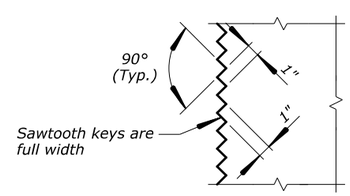

SAWTOOTH KEY DETAIL

No Scale

Notes:

1. *Blockout full girder flange width at both ends.*
2. *See "TYPICAL SECTION AND FRAMING PLAN" sheet for diaphragm layout and details.*

PRELIMINARY
NOT FOR CONSTRUCTION

U.S. DEPARTMENT OF TRANSPORTATION
FEDERAL HIGHWAY ADMINISTRATION
WESTERN FEDERAL LANDS HIGHWAY DIVISION

OLYMPIC NATIONAL PARK

TOWER CREEK BRIDGE

EXTERIOR GIRDER

NO.	DATE	BY	REVISIONS	NO.	DATE	BY	REVISIONS	DESIGNED BY	DRAWN BY	CHECKED BY	SCALE	PROJECT TEAM LEADER	BRIDGE DRAWING	DATE	DRAWING NO.
								AR	BSK		As Shown	George Choubah	8 of 18	March 2017	RG3105-H

ACTUAL FILE: EXT GIRDER.DGN

M:\PROJECTS_ACCESS\WAWA_JEFF_91420(1)\Bridge\Microstation\Bridge Design Files\Tower Creek\0_OPROJECTS.dgn

17-Mar-2017 10:45 AM

70% PLAN IN HAND 04-18-2017

REGION	STATE	PROJECT	SHEET NO.
PW	WA	WA JEFF 91420(1)	G.9

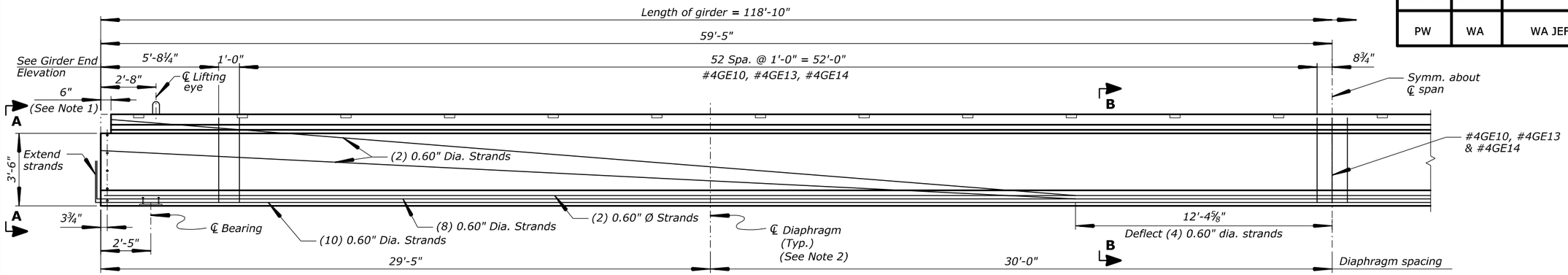

HALF GIRDER ELEVATION

Scale: ⅜" = 1'

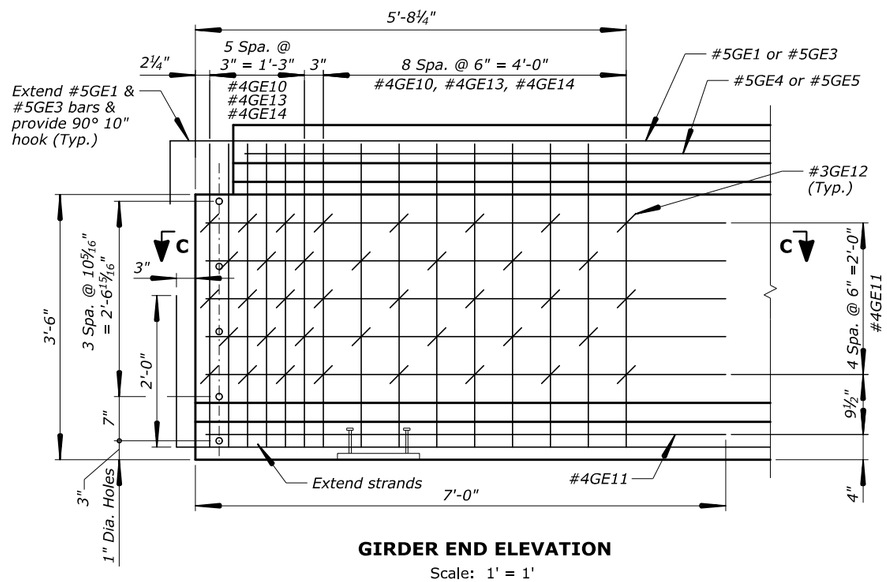

GIRDER END ELEVATION

Scale: 1' = 1'

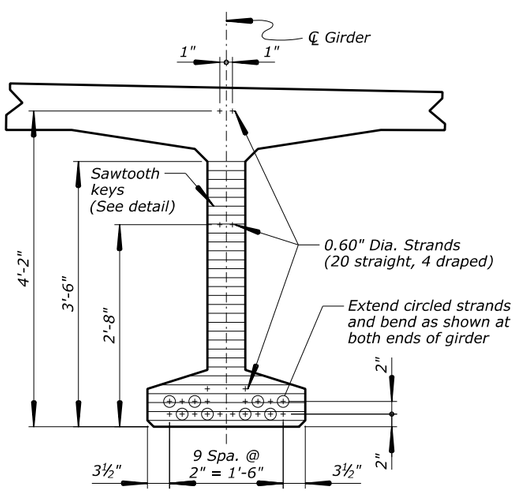

VIEW A-A

Scale: 1' = 1'

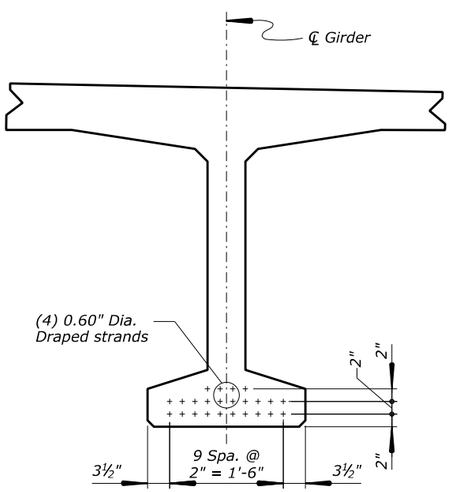

SECTION B-B

Scale: 1' = 1'

Notes:

1. *Blockout full girder flange width at both ends.*
2. *See "TYPICAL SECTION AND FRAMING PLAN" sheet for diaphragm layout and details.*

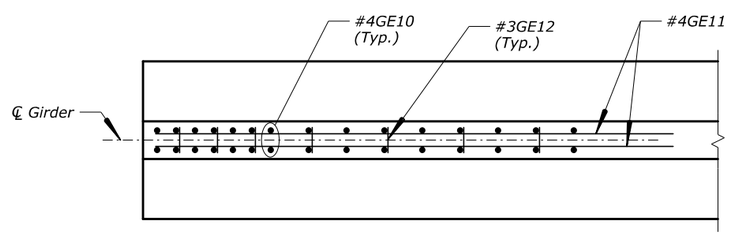

SECTION C-C

Scale: 1' = 1'

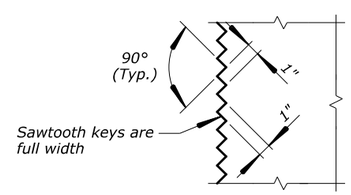

SAWTOOTH KEY DETAIL

No Scale

PRELIMINARY
NOT FOR CONSTRUCTION

70% PLAN IN HAND 04-18-2017

U.S. DEPARTMENT OF TRANSPORTATION
FEDERAL HIGHWAY ADMINISTRATION
WESTERN FEDERAL LANDS HIGHWAY DIVISION

OLYMPIC NATIONAL PARK

TOWER CREEK BRIDGE

INTERIOR GIRDER

NO.	DATE	BY	REVISIONS	NO.	DATE	BY	REVISIONS	DESIGNED BY	DRAWN BY	CHECKED BY	SCALE	PROJECT TEAM LEADER	BRIDGE DRAWING	DATE	DRAWING NO.
								AR	BSK		As Shown	George Choubah	9 of 18	March 2017	RG3105-I

ACTUAL FILE: INT GIRDER.DGN
M:\PROJECTS_ACCESS\WA\WA_JEFF_91420(1)\Bridge\Microstation\Bridge Design Files\Tower Creek\0_0PROJECTS.dgn
17-Mar-2017 10:46 AM

REGION	STATE	PROJECT	SHEET NO.
PW	WA	WA JEFF 91420(1)	G.10

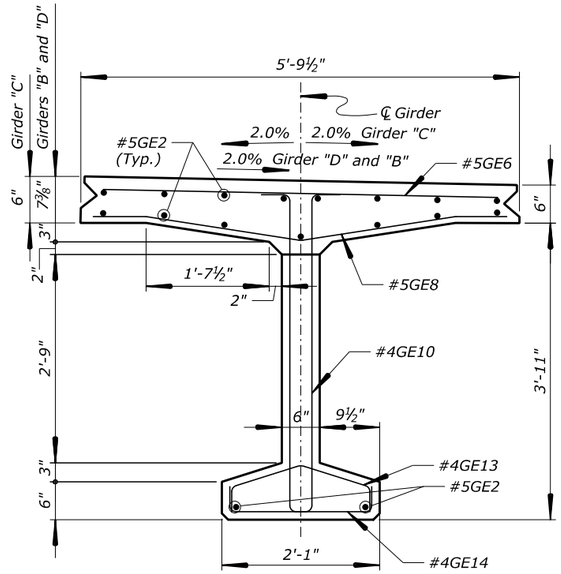

INTERIOR GIRDER MIDSPAN
(Girder "D" shown, Girders "B" and "C" similar)

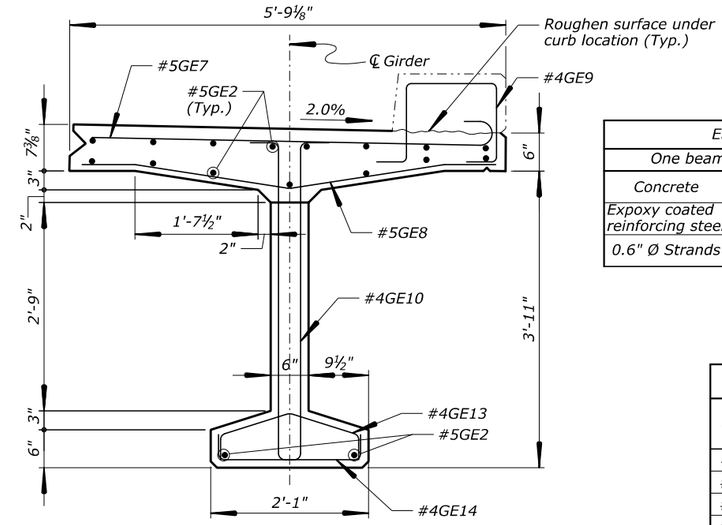

EXTERIOR GIRDER MIDSPAN
(Girder "E" shown, Girder "A" similar)

ESTIMATED QUANTITIES			
One beam only		Int. Girder	Ext. Girder
Concrete	Cu. Yd.	29.1	29.1
Expoxy coated reinforcing steel	Lbs.	5315	5770
0.6" Ø Strands	Ln. Ft.	2870	2870

Notes:

1. Cast girders ¼" longer than shown to allow for shortening due to prestressing.
2. Estimated camber at release of strands = 1¾".
3. Estimated camber after placing overlay and railing = 2¼".
3. After erection, cutoff lifting loops 1 inch below top of flange and fill with an approved non-shrink grout prior to placing overlay.
4. Thicken flange at both ends to compensate for final camber.
5. See "EXTERIOR GIRDER TOP FLANGE" and "INTERIOR GIRDER TOP FLANGE" sheets for top flange and curb bars.

REINFORCING STEEL SCHEDULE											
MARK	TYPE	DIMENSION									
		A	B	C	D	E	F	G	H	K	O
#5GE1	2	10"	43'-0"	---	---	---	---	---	---	---	---
#5GE2	STR	---	60'-0"	---	---	---	---	---	---	---	---
#5GE3	2	10"	22'-4"	---	---	---	---	---	---	---	---
#5GE4	STR	---	43'-0"	---	---	---	---	---	---	---	---
#5GE5	STR	---	22'-4"	---	---	---	---	---	---	---	---
#5GE6	STR	---	5'-8"	---	---	---	---	---	---	---	---
#5GE7	1	7"	5'-8"	---	---	---	---	---	---	---	---
#5GE8	81	---	9½"	2'-0¾"	9½"	---	---	---	3¾"	2'-0½"	5'-8"
#4GE9	S5	8"	1'-0"	1'-2¼"	1'-0"	---	---	8"	---	---	---
#4GE10	51	---	1'-1½"	4'-2⅛"	4"	4½"	---	---	---	---	---
#4GE11	STR	---	6'-10"	---	---	---	---	---	---	---	---
#3GE12	T9	4"	4"	---	---	---	---	4"	---	---	---
#4GE13	54	---	3¾"	11½"	11½"	3¾"	4"	---	4"	---	---
#4GE14	2	4"	4"	---	---	---	---	4"	---	---	---

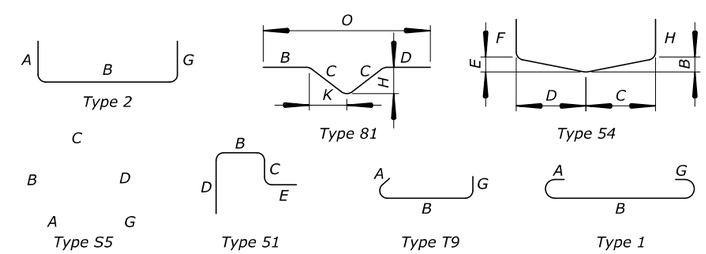

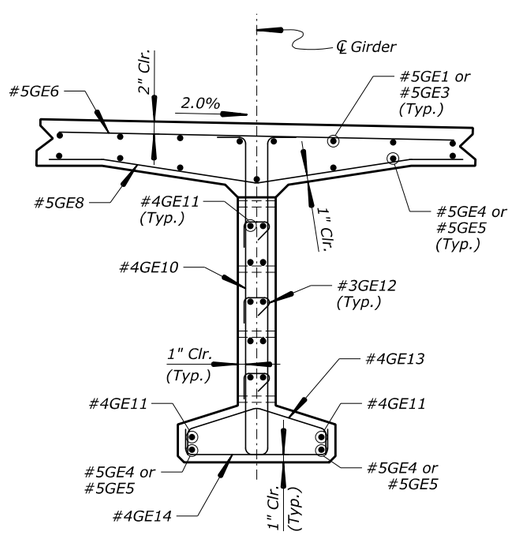

INTERIOR GIRDER END
(Girder "D" shown, Girders "B" and "C" similar)

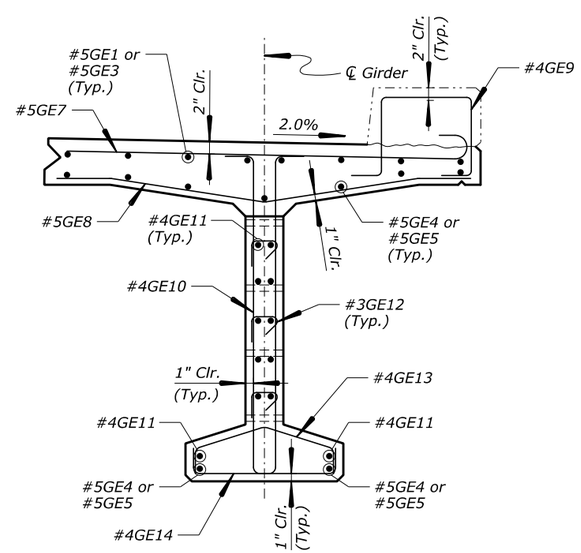

EXTERIOR GIRDER END
(Girder "E" shown, Girder "A" similar)

PRELIMINARY
NOT FOR CONSTRUCTION

U.S. DEPARTMENT OF TRANSPORTATION
FEDERAL HIGHWAY ADMINISTRATION
WESTERN FEDERAL LANDS HIGHWAY DIVISION

OLYMPIC NATIONAL PARK

TOWER CREEK BRIDGE

GIRDER SECTIONS

NO.	DATE	BY	REVISIONS	NO.	DATE	BY	REVISIONS	DESIGNED BY	DRAWN BY	CHECKED BY	SCALE	PROJECT TEAM LEADER	BRIDGE DRAWING	DATE	DRAWING NO.
								AR	BSK		1" = 1'	George Choubah	10 of 18	March 2017	RG3105-J

ACTUAL FILE: GIRDER SECT.DGN
M:\PROJECTS_ACCESS\WA\WA_JEFF_91420(1)\Bridge\Microstation\Bridge Design Files\Tower Creek\0_0PROJECTS.dgn
17-Mar-2017 10:23 AM
70% PLAN IN HAND 04-18-2017

REGION	STATE	PROJECT	SHEET NO.
PW	WA	WA JEFF 91420(1)	G.11

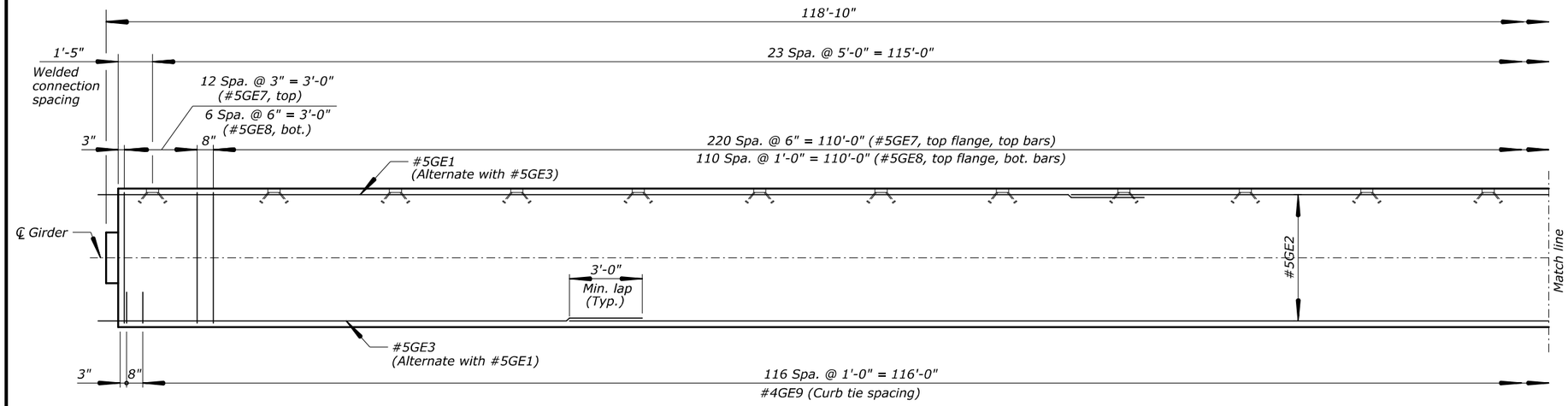

EXTERIOR GIRDER PLAN
(Girder E shown, Girder A similar)
Scale: ⅜" = 1'

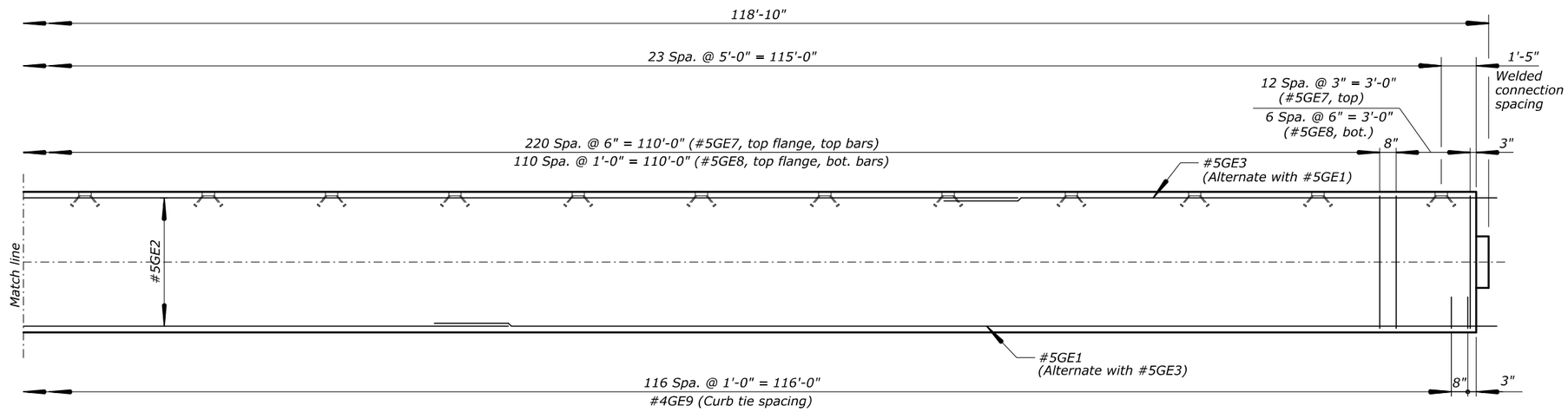

EXTERIOR GIRDER PLAN
(Girder E shown, Girder A similar)
Scale: ⅜" = 1'

Note:
Alternate all longitudinal bars to avoid adjacent splices in top and bottom flanges. Top flange-top bars shown. Top flange-bottom bars and top flange-top bars similar.

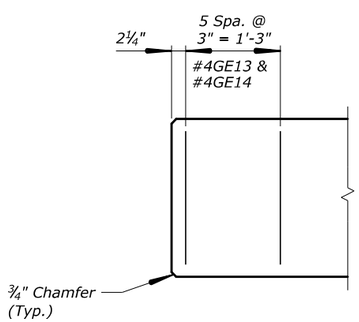

BOTTOM FLANGE PLAN
Scale: 1" = 1'

PRELIMINARY
NOT FOR CONSTRUCTION

70% PLAN IN HAND 04-18-2017

U.S. DEPARTMENT OF TRANSPORTATION
FEDERAL HIGHWAY ADMINISTRATION
WESTERN FEDERAL LANDS HIGHWAY DIVISION

OLYMPIC NATIONAL PARK

TOWER CREEK BRIDGE

EXTERIOR GIRDER TOP FLANGE

NO.	DATE	BY	REVISIONS	NO.	DATE	BY	REVISIONS	DESIGNED BY	DRAWN BY	CHECKED BY	SCALE	PROJECT TEAM LEADER	BRIDGE DRAWING	DATE	DRAWING NO.
								AR	BSK		As Shown	George Choubah	11 of 18	March 2017	RG3105-K

ACTUAL FILE: EXT TOP FLANGE.DGN
M:\PROJECTS_ACCESS\WA\WA_JEFF_91420(1)\Bridge\Microstation\Bridge Design Files\Tower Creek\0_0PROJECTS.dgn
17-Mar-2017 10:46 AM

REGION	STATE	PROJECT	SHEET NO.
PW	WA	WA JEFF 91420(1)	G.12

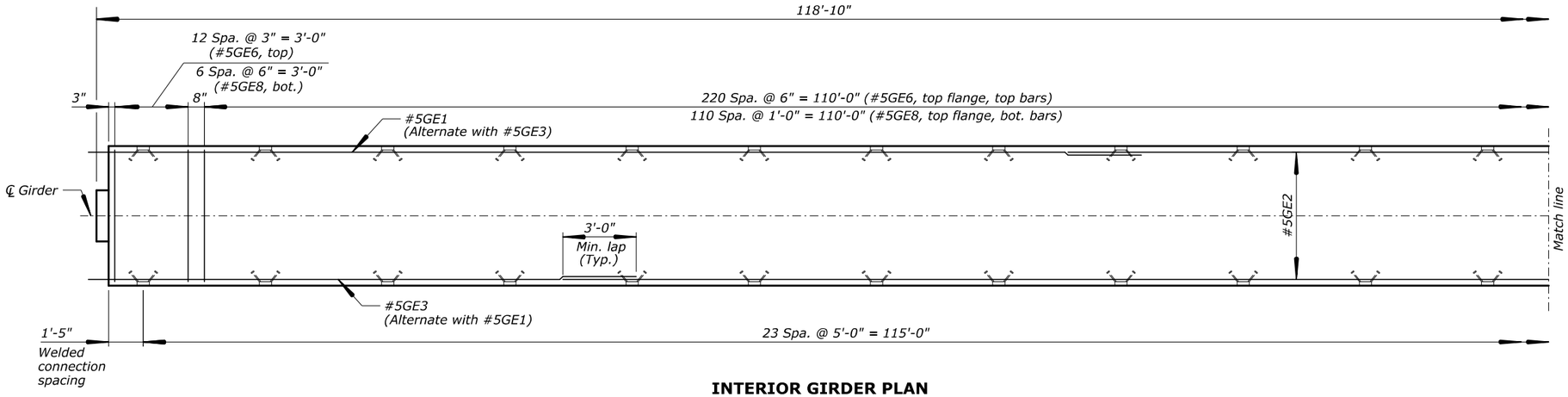

INTERIOR GIRDER PLAN

Scale: ⅜" = 1'

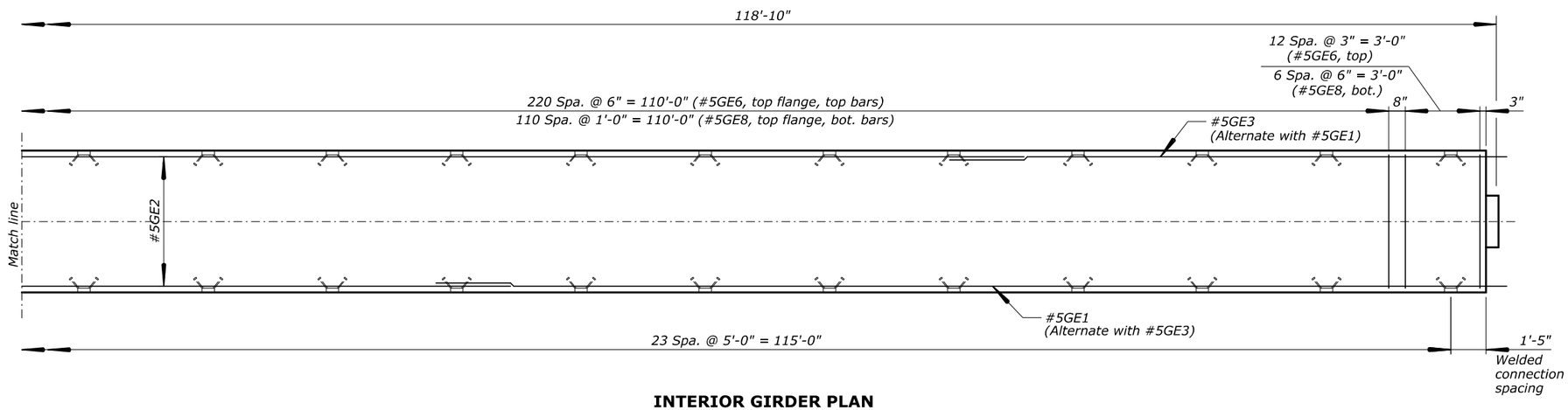

INTERIOR GIRDER PLAN

Scale: ⅜" = 1'

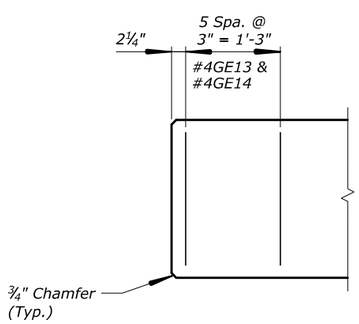

BOTTOM FLANGE PLAN

Scale: 1" = 1'

Note:

Alternate all longitudinal bars to avoid adjacent splices in top and bottom flanges. Top flange-top bars shown. Top flange-bottom bars and top flange-top bars similar.

PRELIMINARY
NOT FOR CONSTRUCTION

U.S. DEPARTMENT OF TRANSPORTATION
FEDERAL HIGHWAY ADMINISTRATION
WESTERN FEDERAL LANDS HIGHWAY DIVISION

OLYMPIC NATIONAL PARK

TOWER CREEK BRIDGE

INTERIOR GIRDER TOP FLANGE

NO.	DATE	BY	REVISIONS	NO.	DATE	BY	REVISIONS	DESIGNED BY	DRAWN BY	CHECKED BY	SCALE	PROJECT TEAM LEADER	BRIDGE DRAWING	DATE	DRAWING NO.
								AR	BSK		As Shown	George Choubah	12 of 18	March 2017	RG3105-L

70% PLAN IN HAND 04-18-2017

ACTUAL FILE: INT TOP FLANGE.DGN

M:\PROJECTS_ACCESS\WA\WA_JEFF_91420(1)\Bridge\Microstation\Bridge Design Files\Tower Creek\0_0PROJECTS.dgn

17-Mar-2017 10:46 AM

REGION	STATE	PROJECT	SHEET NO.
PW	WA	WA JEFF 91420(1)	G.13

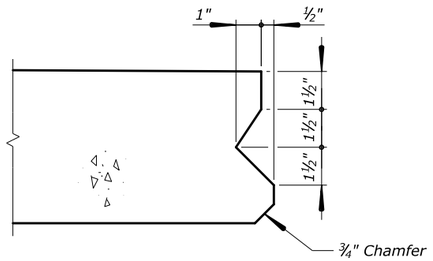

FLANGE KEY DETAIL

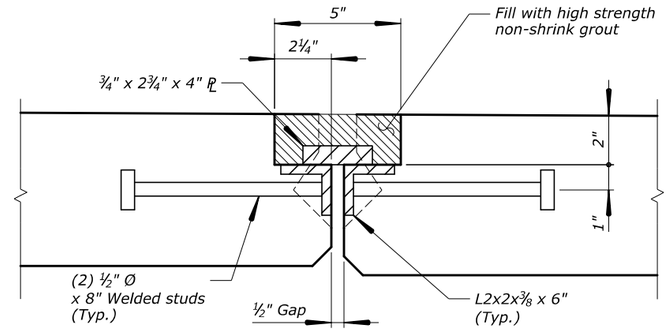

SECTION A-A

Note:

Conform to AASHTO M 251 for steel reinforced elastomeric bearing pads. Provide 60 Durometer hardness, elastomer Grade 3 or higher.

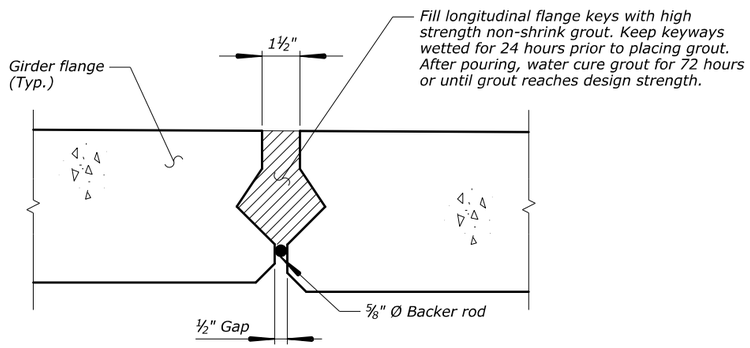

FLANGE KEY BETWEEN CONNECTIONS

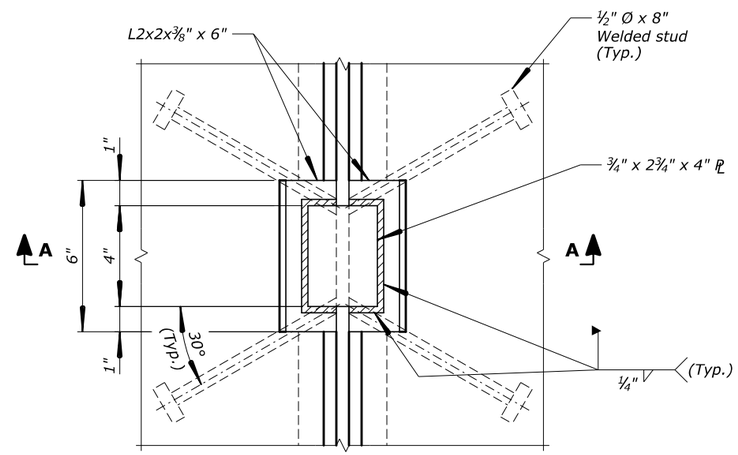

WELDED CONNECTION DETAIL

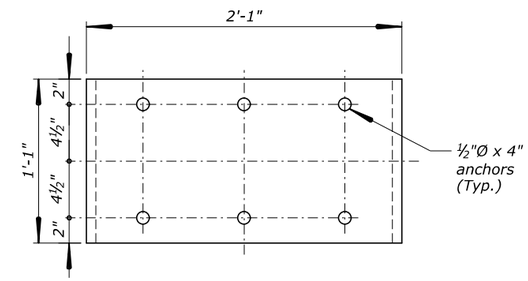

BEARING PLATE PLAN

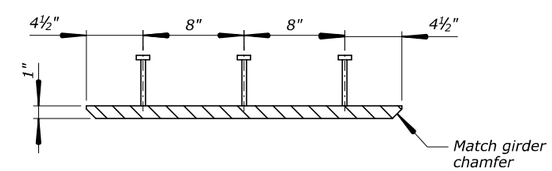

BEARING PLATE ELEVATION
(10 Req'd)

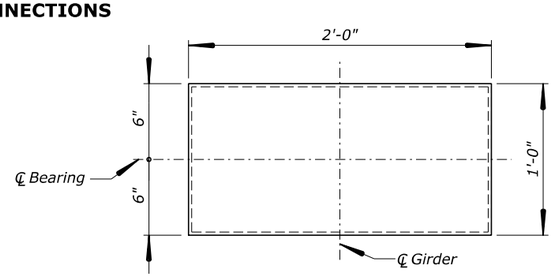

BEARING PAD PLAN

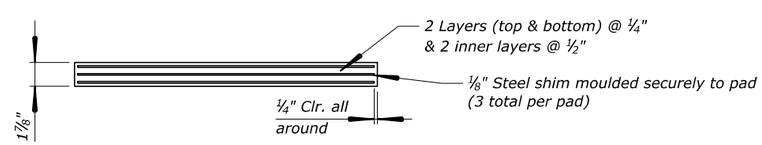

BEARING PAD ELEVATION
(10 Req'd)

PRELIMINARY
NOT FOR CONSTRUCTION

70% PLAN IN HAND 04-18-2017

U.S. DEPARTMENT OF TRANSPORTATION
FEDERAL HIGHWAY ADMINISTRATION
WESTERN FEDERAL LANDS HIGHWAY DIVISION

OLYMPIC NATIONAL PARK

TOWER CREEK BRIDGE

GIRDER DETAILS

NO.	DATE	BY	REVISIONS	NO.	DATE	BY	REVISIONS	DESIGNED BY	DRAWN BY	CHECKED BY	SCALE	PROJECT TEAM LEADER	BRIDGE DRAWING	DATE	DRAWING NO.
								AR	BSK		No Scale	George Choubah	13 of 18	March 2017	RG3105-M

ACTUAL FILE: GIRDER DET.DGN
M:\PROJECTS_ACCESS\WAWA_JEFF_91420(1)\Bridge\Microstation\Bridge Design Files\Tower Creek\0_0PROJECTS.dgn
17-Mar-2017 10:24 AM

REGION	STATE	PROJECT	SHEET NO.
PW	WA	WA JEFF 91420(1)	G.14

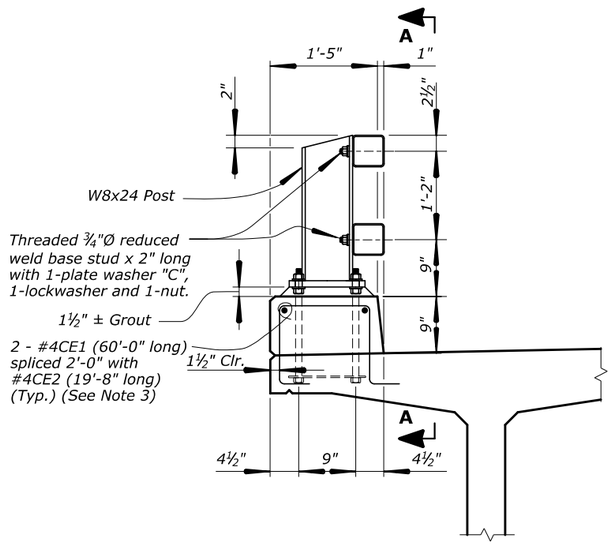

TYPICAL SECTION
Scale: 1" = 1'-0'

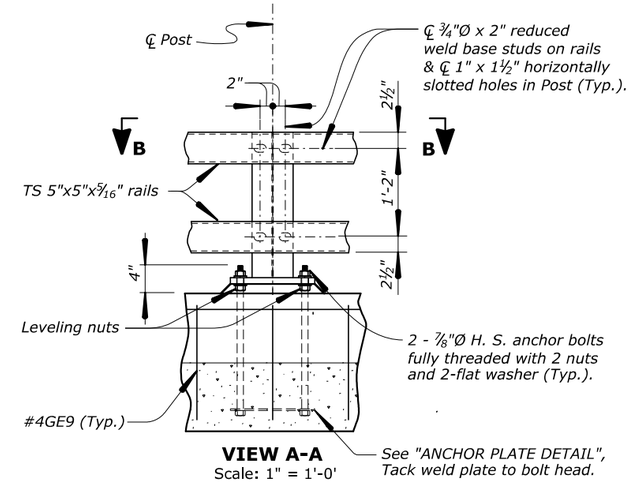

VIEW A-A
Scale: 1" = 1'-0'

BRIDGE RAILING NOTES:

GENERAL: The Alaska Multi-State Rail meets the TL-4 performance criteria.

MATERIALS: Steel Posts, base plates, plate washers, and splice sleeves shall conform to ASTM A36. Structural tubing for rails shall conform to ASTM A500 or A501, Grade B. All components of the bridge rail shall be hot-dip galvanized after fabrication in accordance with AASHTO M 111 or M 232.

FABRICATION: Structural steel shall be shop fabricated. Submit shop drawings to the CO for approval prior to fabrication. Welding shall conform to the ANSI/AASHTO/AWS, and shall be by a certified welder. Welding for welded stud bolts shall conform to ANSI/AASHTO/AWS. All steel shall be fabricated before being galvanized.

RAIL SPLICE ASSEMBLIES: Rail splice assemblies must be provided as shown on the plans. With rails continuous over two or more posts.

GROUT: Use grout that has a minimum 24 hours f'c of 3,000 psi.

ERECTION: No field cutting or welding is permitted unless approved by the CO. All rail Posts shall be set vertically and the railing erected parallel to the girder profile. Contractor shall furnish steel shim plates as required to align railing. The completed installation shall not reflect any unevenness in the structure.

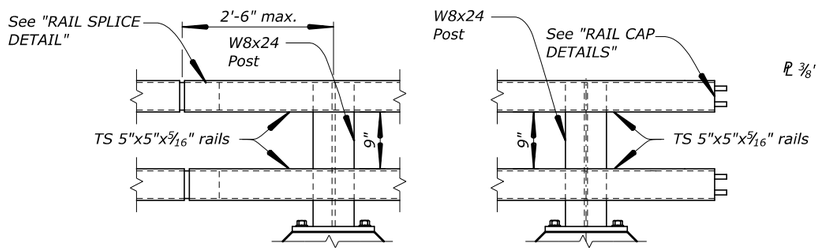

RAIL SPLICE
Scale: 1" = 1'-0'

END SECTION
Scale: 1" = 1'-0'

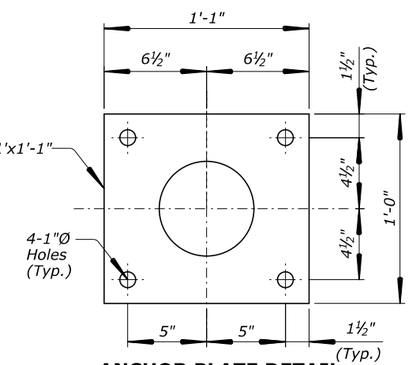

ANCHOR PLATE DETAIL
Not to scale

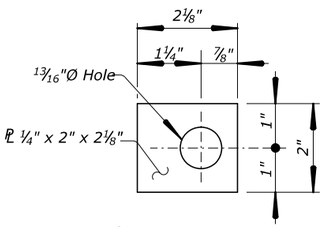

¼" PL WASHER "C"

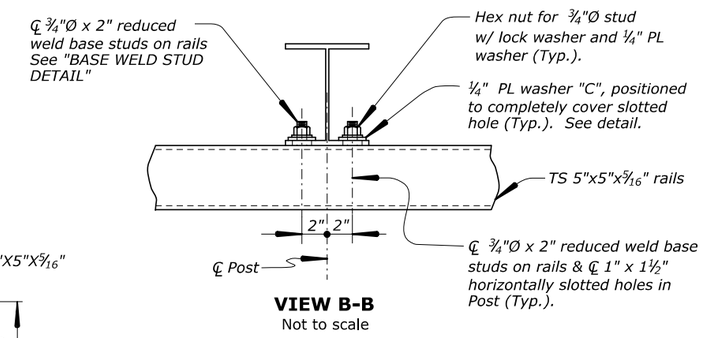

VIEW B-B
Not to scale

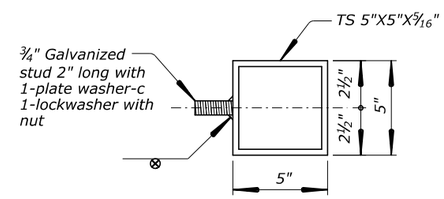

BASE WELD STUD DETAIL
Not to scale

Notes:

1. *Set top of Post 2'-8½" above finish grade.*
2. *See "GIRDER SECTIONS" and "EXTERIOR GIRDER TOP FLANGE" sheets for curb reinforcement.*
3. *Alternate longitudinal curb reinforcement to avoid adjacent splices similar to longitudinal deck reinforcement. Place curb reinforcement continuously from approach slab curb into bridge curb.*

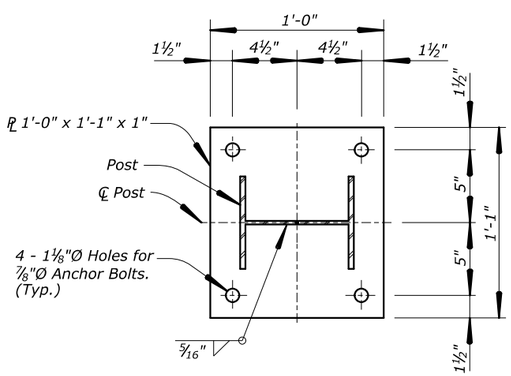

BASE PLATE DETAILS
Not to scale

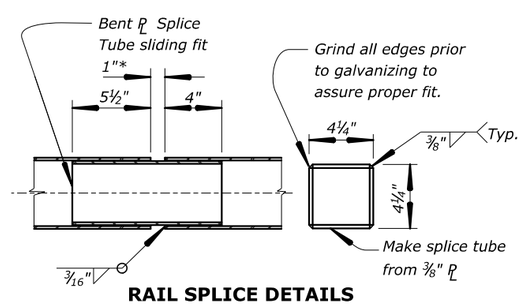

RAIL SPLICE DETAILS
Not to scale

* 1" Gap unless noted otherwise on detail plans.

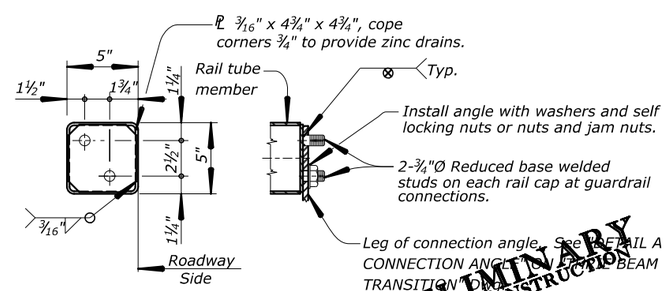

RAIL CAP DETAILS
Not to scale

PRELIMINARY
NOT FOR CONSTRUCTION

U.S. DEPARTMENT OF TRANSPORTATION
FEDERAL HIGHWAY ADMINISTRATION
WESTERN FEDERAL LANDS HIGHWAY DIVISION

OLYMPIC NATIONAL PARK

TOWER CREEK BRIDGE

BRIDGE RAILING

NO.	DATE	BY	REVISIONS	NO.	DATE	BY	REVISIONS	DESIGNED BY	DRAWN BY	CHECKED BY	SCALE	PROJECT TEAM LEADER	BRIDGE DRAWING	DATE	DRAWING NO.
								AR	AR		As Shown	George Choubah	14 of 18	March 2017	RG3105-N

70% PLAN IN HAND 04-18-2017
ACTUAL FILE: R14_WA_91420(1)_Bridge_Railing.DGN
M:\PROJECTS_ACCESS\WA\WA_JEFF_91420(1)\Bridge\Microstation\Bridge Design Files\Tower Creek\0_0PROJECTS.dgn
17-Mar-2017 10:24 AM

REGION	STATE	PROJECT	SHEET NO.
PW	WA	WA JEFF 91420(1)	G.15

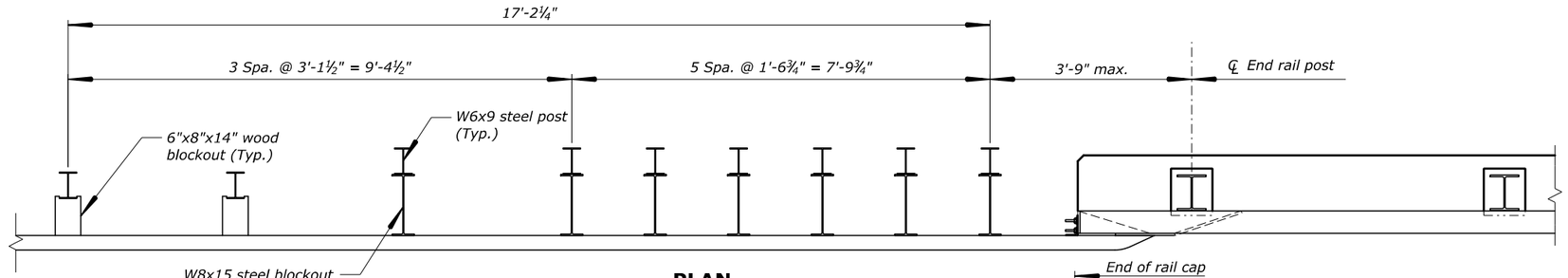

PLAN

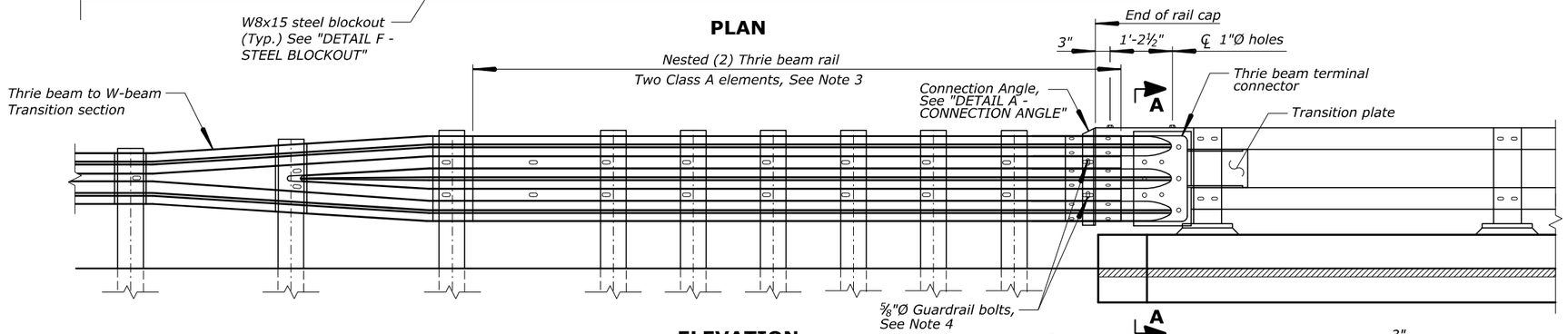

ELEVATION

Notes:

1. All guardrail and guardrail connection hardware to conform to AASHTO M 180. All H.S. Bolts conform to ASTM A325. All other steel to conform to ASTM A709 Grade 36.
2. Conform to G-00, G-04S, G-25S for all guardrail details not shown.
3. Lap approach guardrail to prevent snags from oncoming traffic.
4. Provide 4½" horizontal slot in approach guardrail. Adjust guardrail bolts for sliding fit.
5. This design approved for NCHRP 350, TL-4.

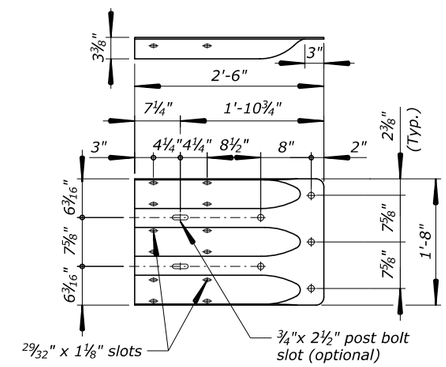

THRIE BEAM TERMINAL CONNECTOR

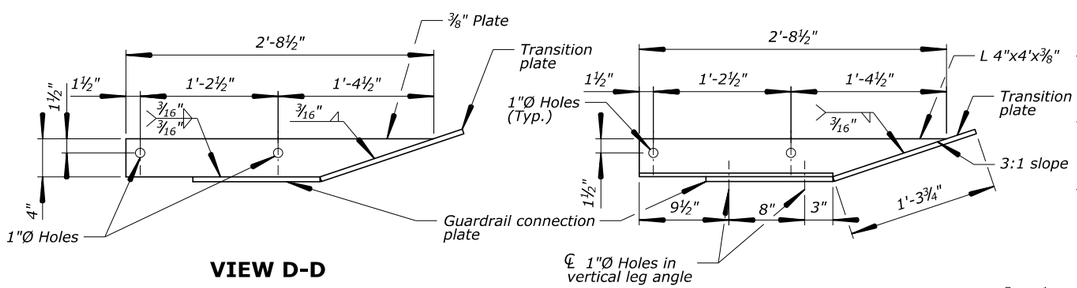

VIEW D-D

SECTION C-C

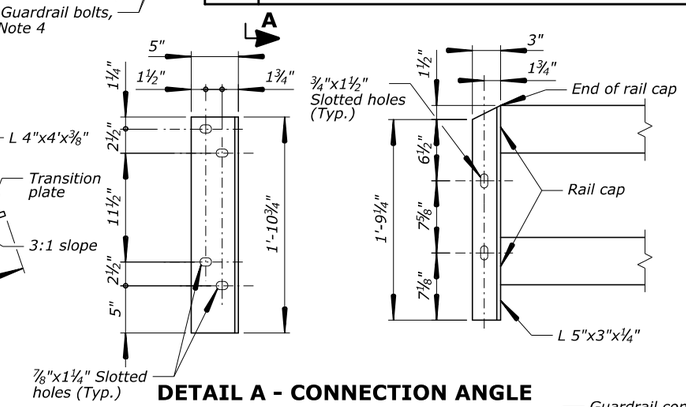

DETAIL A - CONNECTION ANGLE

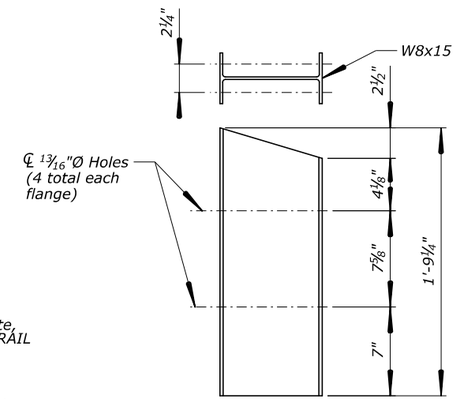

DETAIL F - STEEL BLOCKOUT

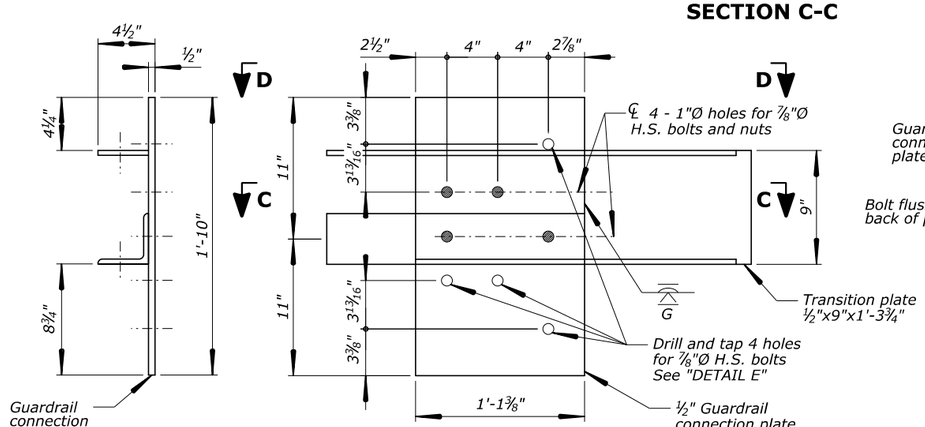

DETAIL B - GUARDRAIL CONNECTION PLATE

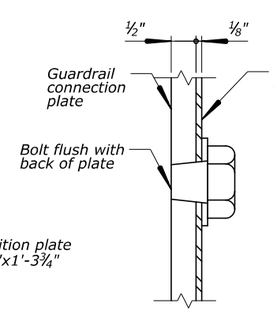

DETAIL E

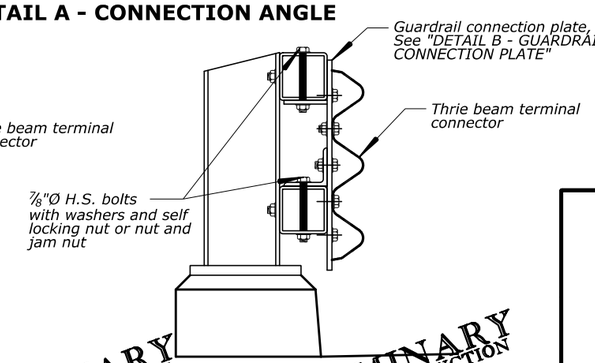

SECTION A-A

PRELIMINARY NOT FOR CONSTRUCTION

PRELIMINARY NOT FOR CONSTRUCTION

70% PLAN IN HAND 04-18-2017

U.S. DEPARTMENT OF TRANSPORTATION
FEDERAL HIGHWAY ADMINISTRATION
WESTERN FEDERAL LANDS HIGHWAY DIVISION

OLYMPIC NATIONAL PARK

TOWER CREEK BRIDGE

THRIE BEAM TRANSITION

NO.	DATE	BY	REVISIONS	NO.	DATE	BY	REVISIONS	DESIGNED BY	DRAWN BY	CHECKED BY	SCALE	PROJECT TEAM LEADER	BRIDGE DRAWING	DATE	DRAWING NO.
								AR	AR		No scale	George Choubah	15 of 18	March 2017	RG3105-O

ACTUAL FILE: R15_WA_91420(1)_Thrie_Beam_Rail.DGN
M:\PROJECTS_ACCESS\WA\WA_JEFF_91420(1)\Bridge\Microstation\Bridge Design Files\Tower Creek\0_0PROJECTS.dgn
17-Mar-2017 10:29 AM

REGION	STATE	PROJECT	SHEET NO.
PW	WA	WA JEFF 91420(1)	G.16

TO BE PROVIDED

PRELIMINARY
NOT FOR CONSTRUCTION

U.S. DEPARTMENT OF TRANSPORTATION
FEDERAL HIGHWAY ADMINISTRATION
WESTERN FEDERAL LANDS HIGHWAY DIVISION

OLYMPIC NATIONAL PARK

TOWER CREEK BRIDGE

REINFORCING STEEL BAR LIST

NO.	DATE	BY	REVISIONS	NO.	DATE	BY	REVISIONS	DESIGNED BY	DRAWN BY	CHECKED BY	SCALE	PROJECT TEAM LEADER	BRIDGE DRAWING	DATE	DRAWING NO.
								AR			No Scale	George Choubah	16 of 18	March 2017	RG3105-P

17-Mar-2017 10:25 AM M:\PROJECTS_ACCESS\WA\WA_JEFF_91420(1)\Bridge\Microstation\Bridge Design Files\Tower Creek\0_OPRODETAILS.dgn ORIGINAL FILE: REBAR.DGN

70% PLAN IN HAND 04-18-2017

REGION	STATE	PROJECT	SHEET NO.
PW	WA	WA JEFF 91420(1)	G.17

TO BE PROVIDED

70% PLAN IN HAND 04-18-2017

PRELIMINARY
NOT FOR CONSTRUCTION

U.S. DEPARTMENT OF TRANSPORTATION
FEDERAL HIGHWAY ADMINISTRATION
WESTERN FEDERAL LANDS HIGHWAY DIVISION

OLYMPIC NATIONAL PARK

TOWER CREEK BRIDGE

EPOXY COATED
REINFORCING STEEL BAR LIST

NO.	DATE	BY	REVISIONS	NO.	DATE	BY	REVISIONS	DESIGNED BY	DRAWN BY	CHECKED BY	SCALE	PROJECT TEAM LEADER	BRIDGE DRAWING	DATE	DRAWING NO.
								AR			No Scale	George Choubah	17 of 18	March 2017	RG3105-Q

17-Mar-2017 10:25 AM M:\PROJECTS_ACCESS\WA\WA_JEFF_91420(1)\Bridge\Microstation\Bridge Design Files\Tower Creek\0_OPROJECTS.dgn ORIGINAL FILE: REBAR EPOXY.DGN

REGION	STATE	PROJECT	SHEET NO.
PW	WA	WA JEFF 91420(1)	G.18

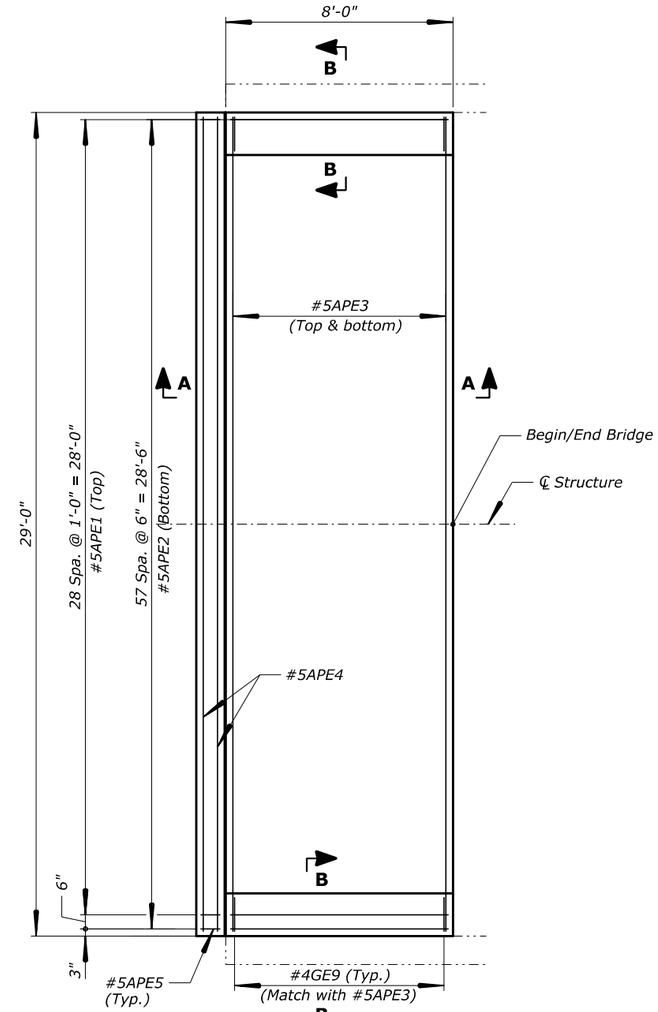

PLAN
Scale: ⅜" = 1'

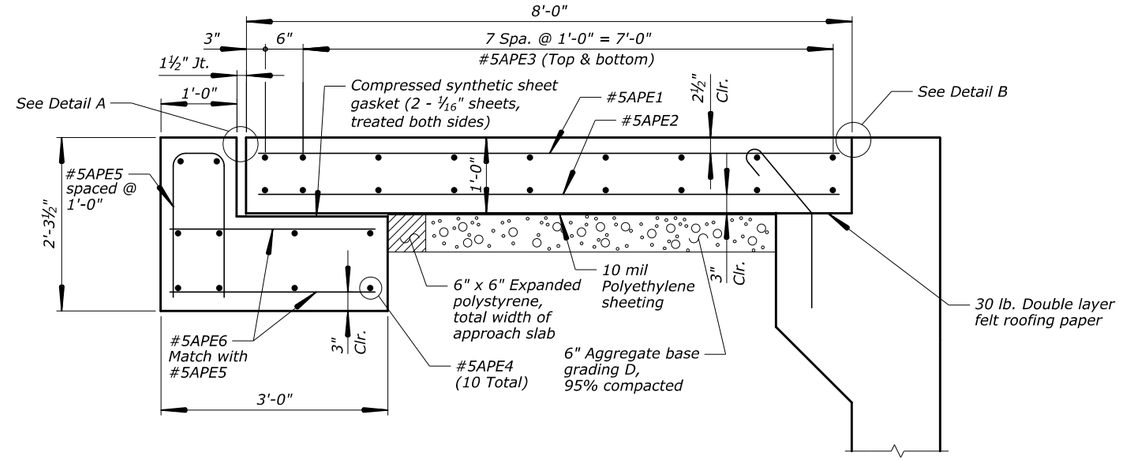

SECTION A-A
Scale: 1" = 1'

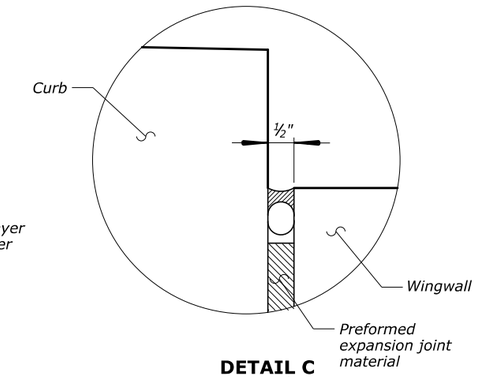

DETAIL C
No Scale

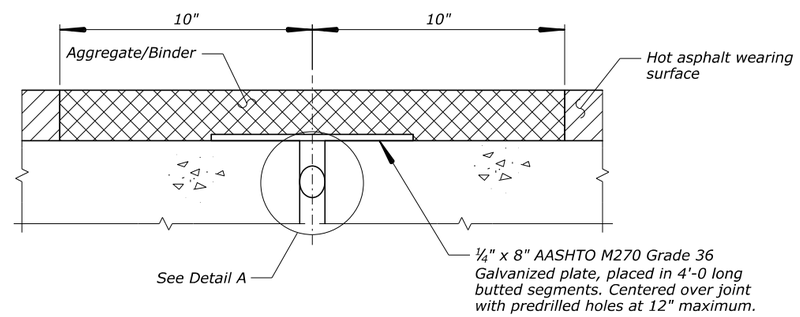

ASPHALT PLUG JOINT
No Scale

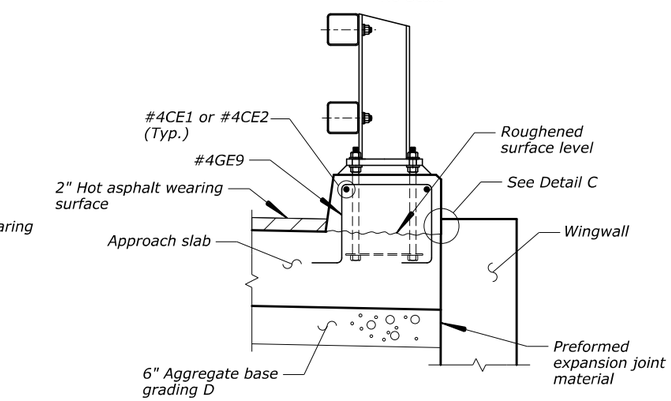

SECTION B-B
Scale: 1" = 1'

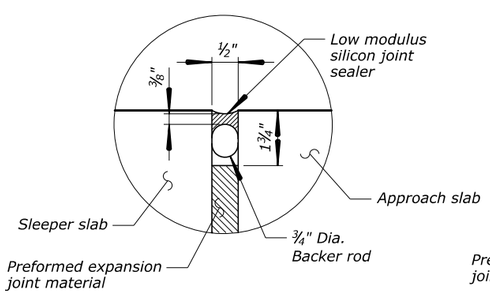

DETAIL A
No Scale

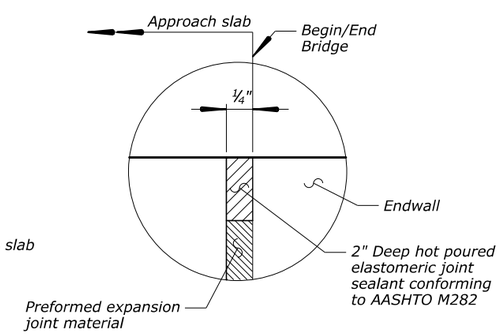

DETAIL B
No Scale

Notes:

1. See "GIRDER SECTIONS," "EXTERIOR GIRDER TOP FLANGE," and "BRIDGE RAILING" sheets for curb reinforcement details.
2. See "ABUTMENT LAYOUT" sheet for dowel reinforcement details.

ESTIMATED QUANTITIES FOR ONE APPROACH SLAB

Slab Length	Slab Width	Concrete (Cu. Yd.)	Reinf. * Steel (Lbs.)	Joint Width
8'-0"	29'-0"	14	2080	1½"

* Does not include dowels

PRELIMINARY
NOT FOR CONSTRUCTION

U.S. DEPARTMENT OF TRANSPORTATION
FEDERAL HIGHWAY ADMINISTRATION
WESTERN FEDERAL LANDS HIGHWAY DIVISION

OLYMPIC NATIONAL PARK

TOWER CREEK BRIDGE

APPROACH SLAB

NO.	DATE	BY	REVISIONS	NO.	DATE	BY	REVISIONS	DESIGNED BY	DRAWN BY	CHECKED BY	SCALE	PROJECT TEAM LEADER	BRIDGE DRAWING	DATE	DRAWING NO.
								AR	BSK		As Shown	George Choubah	18 of 18	March 2017	RG3105-R

70% PLAN IN HAND 04-18-2017

ACTUAL FILE: APPROACH SLAB.DGN

M:\PROJECTS_ACCESS\WA\WA_JEFF_91420(1)\Bridge\Microstation\Bridge Design Files\Tower Creek\0_0PROJECTS.dgn

17-Mar-2017 10:25 AM

REGION	STATE	PROJECT	SHEET NO.
PW	WA	WA JEFF 91420(1)	G.19

Bridge length = 120'-0"

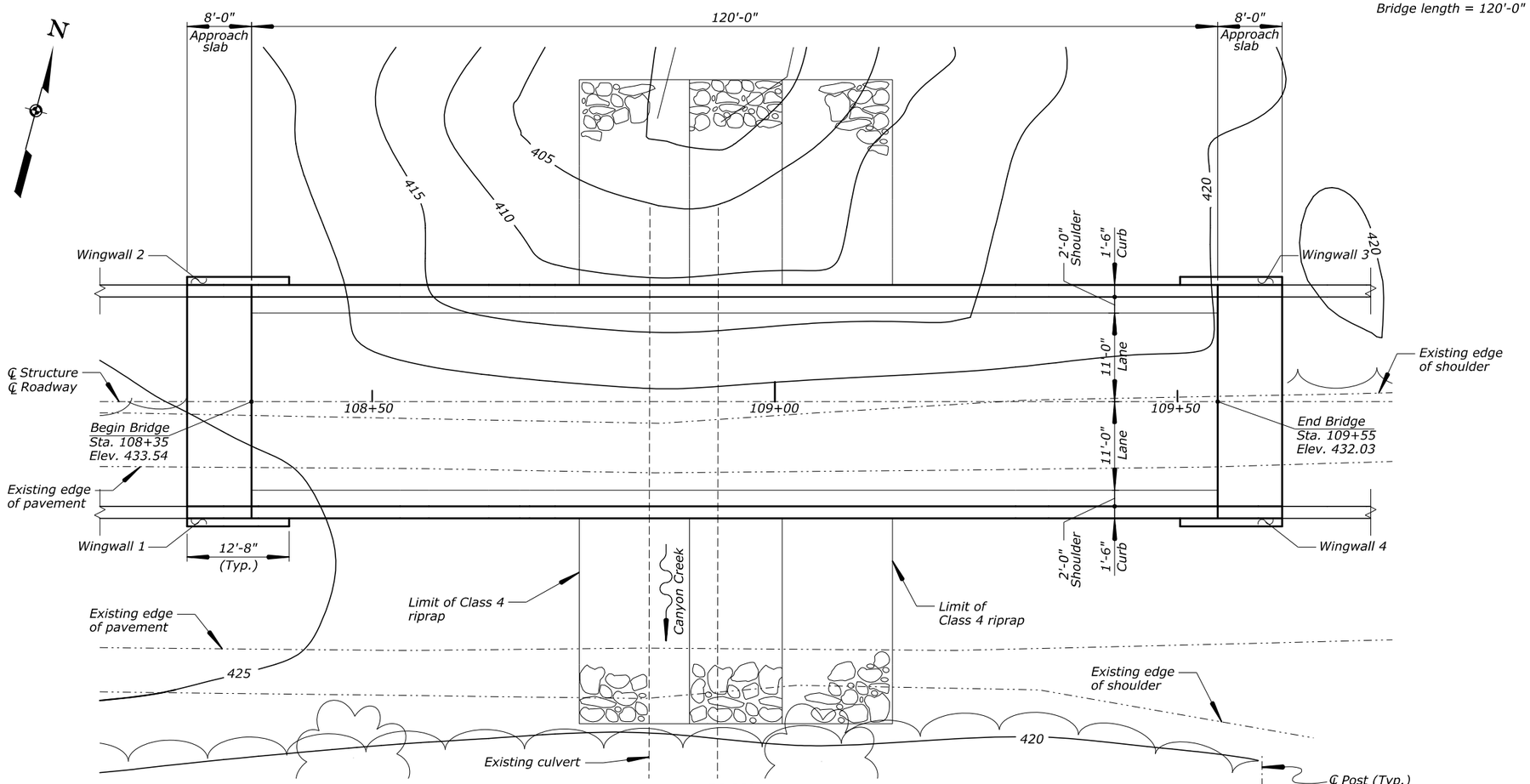

PLAN

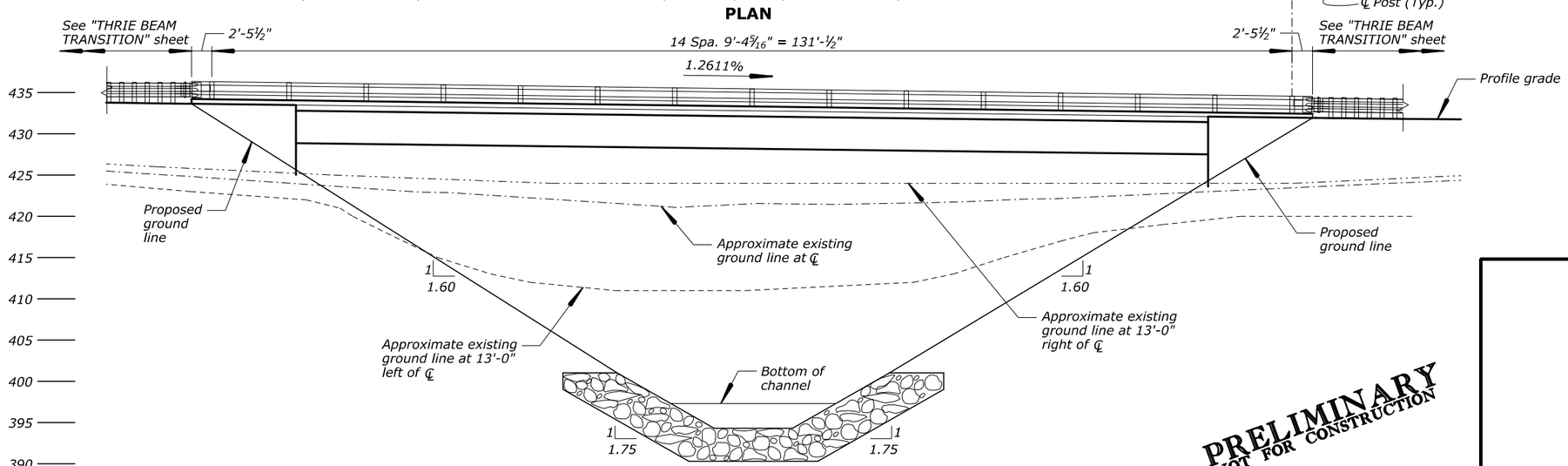

ELEVATION

PRELIMINARY
NOT FOR CONSTRUCTION

70% PLAN IN HAND 04-18-2017

U.S. DEPARTMENT OF TRANSPORTATION
FEDERAL HIGHWAY ADMINISTRATION
WESTERN FEDERAL LANDS HIGHWAY DIVISION

OLYMPIC NATIONAL PARK

CANYON CREEK BRIDGE

PLAN AND ELEVATION

NO.	DATE	BY	REVISIONS	NO.	DATE	BY	REVISIONS	DESIGNED BY	DRAWN BY	CHECKED BY	SCALE	PROJECT TEAM LEADER	BRIDGE DRAWING	DATE	DRAWING NO.
								AR	BSK		⅛" = 1'	George Choubah	1 of 18	March 2017	RG3106-A

ACTUAL FILE: PE.DGN

M:\PROJECTS_ACCESS\WA\WA_JEFF_91420(1)\Bridge\Microstation\Bridge Design Files\0_0PROJECTS.dgn

17-Mar-2017 10:10 AM

REGION	STATE	PROJECT	SHEET NO.
PW	WA	WA JEFF 91420(1)	G.20

GENERAL NOTES:

SPECIFICATIONS:

Construction:

Standard Specifications for Construction of Roads and Bridges on Federal Highway Projects, FP-14.

Design:

AASHTO LRFD Bridge Design Specifications, 2014, 7th Edition with 2015 Interim Revisions.

DESIGN LOADING:

Dead Loads:

Concrete: 150 pcf
Asphalt wearing surface: 25 psf
Future asphalt wearing surface: 25 psf

Live Loads:

AASHTO HL-93; maximum dynamic load allowance, IM=33%

MATERIALS:

Design stresses:

Class A(AE) Concrete:	f'c = 4,500 psi at 28 days
Class D(AE) Concrete:	f'c = 5,000 psi at 28 days
Class P (Prestressed) Concrete:	f'c = 10,000 psi at 28 days f'ci = 7,500 psi at time of release
Structural Steel:	fy = 50,000 psi
Reinforcing Steel:	fy = 60,000 psi
Prestressing Steel:	fs = 270,000 psi

Concrete:

Furnish Class P (Prestressed) concrete for precast decked bulb tees.
Furnish Class D(AE) concrete for approach slabs, curbs, diaphragms, and endwalls.
Furnish Class A(AE) concrete for all other concrete.

Chamfer exposed edges of all concrete ¾" unless otherwise noted.

Furnish flexible cellular joint filler meeting the requirments of ASTM D1056, Type 2, grade 4 or 5.

Furnish preformed expansion material meeting the requirments of AASHTO M 213.

Reinforcing steel:

Furnish reinforcing steel conforming to AASHTO M 31 or M 322, grade 60 deformed.

Provide epoxy coated reinforcing steel for girders and all reinforcing steel located or anchored in Class D(AE) concrete unless otherwise noted.

Provide standard hooks as defined by ACI SP-66 for bends unless otherwise noted.

Provide 2" cover for reinforcing steel unless otherwise noted.

Prestressing steel:

Furnish grade 270, 0.60" diameter, seven-wire, low-relaxation, prestressing steel conforming to AASHTO M 203.

*Pre-tension each strand to a total load of 43,940 lb (f'si = 0.75*f's = 202,500 psi).*

The final estimated effective prestress force per strand is 38,840 lb based on estimated losses of 23.48 ksi.

Bearings:

Provide laminated elastomeric bearing pads conforming to the requirements of Section 18.2 of the AASHTO LFRD Bridge Construction Specifications, with 60 durometer hardness. Bearings are designed according to AASHTO LRFD design method A.

GEOTECHNICAL REPORT:

For boring logs and other geotechnical information, see Geotechnical Memorandum No. 20-16, dated 07-2016.

ESTIMATE OF QUANTITIES

ITEM NO.	ITEM	QUANTITY	UNIT	NOTES
20803-0000	Structure Backfill	185	CUYD	
40301-0100	Asphalt Concrete Pavement, Type 1	45	TON	
55101-0200	Concrete Filled Steel Pipe Piles, In Place (24-Inch Diameter x 0.75-Inch)	850	LNFT	
55104-0000	Dynamic Pile Load Test	2	EACH	
55201-0200	Structural Concrete, Class A(AE)	45	CUYD	
55201-0800	Structural Concrete, Class D(AE)	40	CUYD	
55202-2000	Structural Concrete, Class D (AE), For Approach Slabs, Type 2	55	SQYD	
55302-2700	Precast, Prestressed Concrete Deck Bulb Tee Girders, 53-Inch	595	LNFT	
55401-1000	Reinforcing Steel	6,300	LB	
55401-2000	Reinforcing Steel, Epoxy Coated	3,500	LB	
55601-1100	Bridge Railing, Steel, Two Rail	356	LNFT	
55901-0000	Membrane Waterproofing	350	SQYD	
56401-1000	Bearing Device, Elastomeric	10	EACH	

DRAWING INDEX

DRAWING NO.	DRAWING TITLE
RG3106-A	Plan and Elevation
RG3106-B	General Notes
RG3106-C	Foundation Layout
RG3106-D	Abutment Layout
RG3106-E	Abutment Endwall
RG3106-F	Abutment Wingwall
RG3106-G	Typical Section and Framing Plan
RG3106-H	Exterior Girder
RG3106-I	Interior Girder
RG3106-J	Girder Sections
RG3106-K	Exterior Girder Top Flange
RG3106-L	Interior Girder Top Flange
RG3106-M	Girder Details
RG3106-N	Bridge Railing
RG3106-O	Thrie Beam Transition
RG3106-P	Reinforcing Steel Bar List
RG3106-Q	Epoxy Coated Reinforcing Steel Bar List
RG3106-R	Approach Slab Details

PRELIMINARY
NOT FOR CONSTRUCTION

U.S. DEPARTMENT OF TRANSPORTATION
FEDERAL HIGHWAY ADMINISTRATION
WESTERN FEDERAL LANDS HIGHWAY DIVISION

OLYMPIC NATIONAL PARK

CANYON CREEK BRIDGE

GENERAL NOTES

NO.	DATE	BY	REVISIONS	NO.	DATE	BY	REVISIONS	DESIGNED BY	DRAWN BY	CHECKED BY	SCALE	PROJECT TEAM LEADER	BRIDGE DRAWING	DATE	DRAWING NO.
								AR	AR		No Scale	George Choubah	2 of 18	March 2017	RG3106-B

70% PLAN IN HAND 04-18-2017
M:\PROJECTS_ACCESS\WA\WA_JEFF_91420(1)\Bridge\Microstation\Bridge Design Files\0_OPROJECTS.dgn ACTUAL FILE: M02 MT 210(1) GN.DGN
12-Apr-2017 10:01 AM

REGION	STATE	PROJECT	SHEET NO.
PW	WA	WA JEFF 91420(1)	G.21

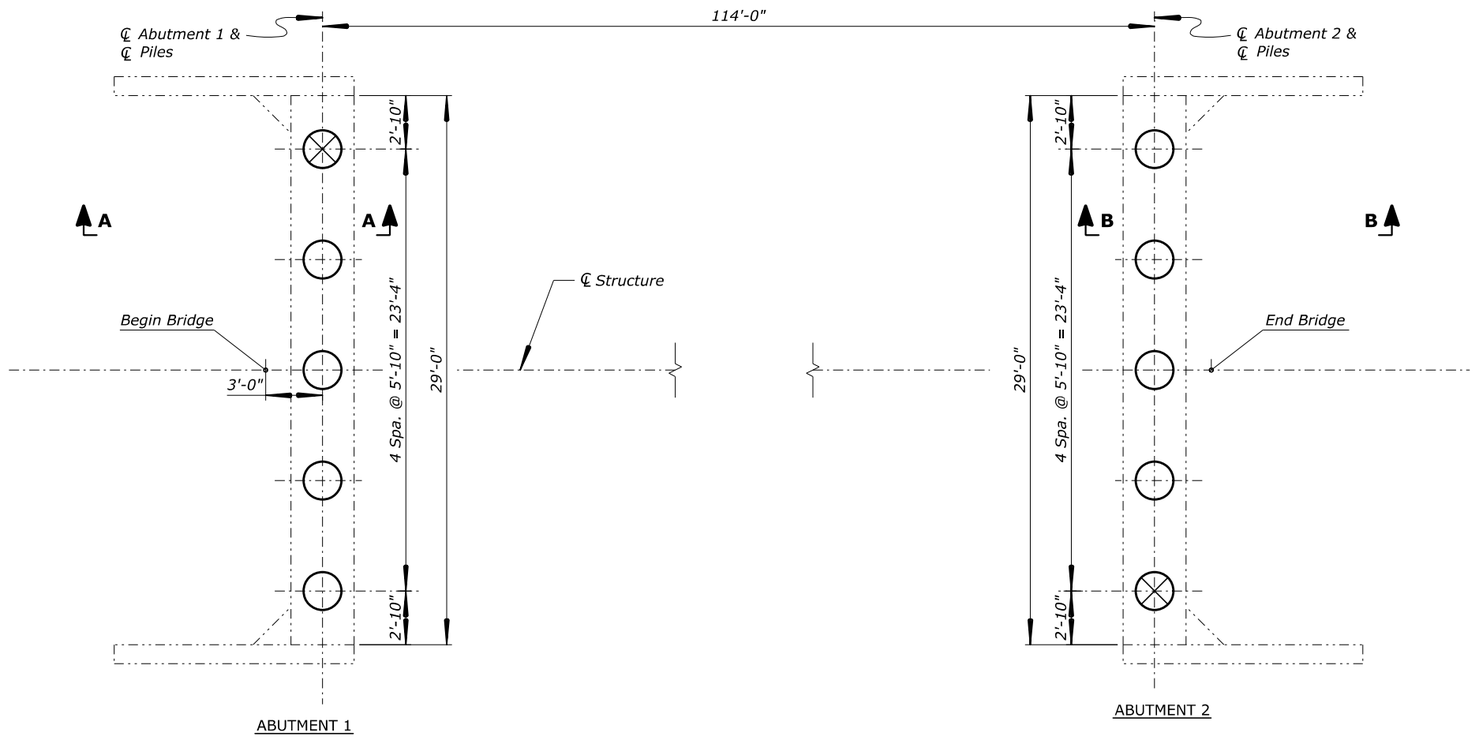

FOUNDATION PLAN

Notes:

1. ◯ Indicates pile location.
2. ⊗ Indicates Dynamic Load Test location.
3. Provide 60° conical driving point (inside flange).

PILE DRIVING INFORMATION

LOCATION	RESISTANCE FACTOR	REQUIRED COMPRESSIVE NOMINAL BEARING RESISTANCE (kips/pile)*	ESTIMATED TOTAL LENGTH OF PILES
Abut. 1	0.65	260	102.27 ft
Abut. 2	0.65	260	66.84 ft

* Drive piles to the required compressive nominal bearing resistance

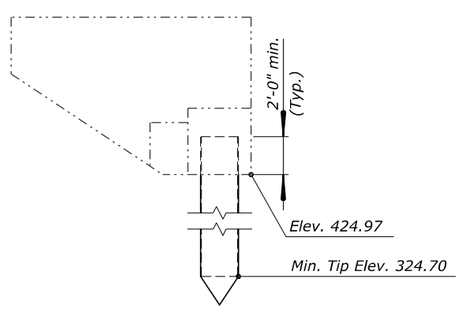

SECTION A-A

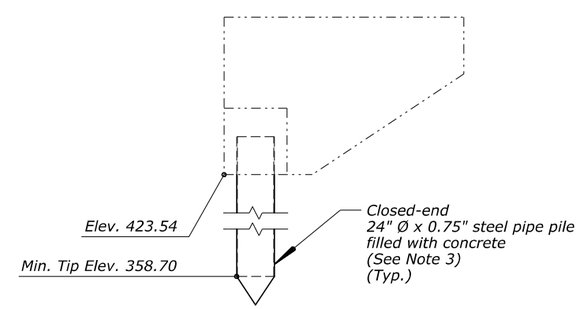

SECTION B-B

PRELIMINARY
NOT FOR CONSTRUCTION

70% PLAN IN HAND 04-18-2017

U.S. DEPARTMENT OF TRANSPORTATION
FEDERAL HIGHWAY ADMINISTRATION
WESTERN FEDERAL LANDS HIGHWAY DIVISION

OLYMPIC NATIONAL PARK

CANYON CREEK BRIDGE

FOUNDATION LAYOUT

NO.	DATE	BY	REVISIONS	NO.	DATE	BY	REVISIONS	DESIGNED BY	DRAWN BY	CHECKED BY	SCALE	PROJECT TEAM LEADER	BRIDGE DRAWING	DATE	DRAWING NO.
								AR	BSK		¼" = 1'	George Choubah	3 of 18	March 2017	RG3106-C

ACTUAL FILE: FL .DGN
M:\PROJECTS_ACCESS\WA\WA_JEFF_91420(1)\Bridge\Microstation\Bridge Design Files\0_0PROJECTS.dgn
12-Apr-2017 10:03 AM

REGION	STATE	PROJECT	SHEET NO.
PW	WA	WA JEFF 91420(1)	G.22

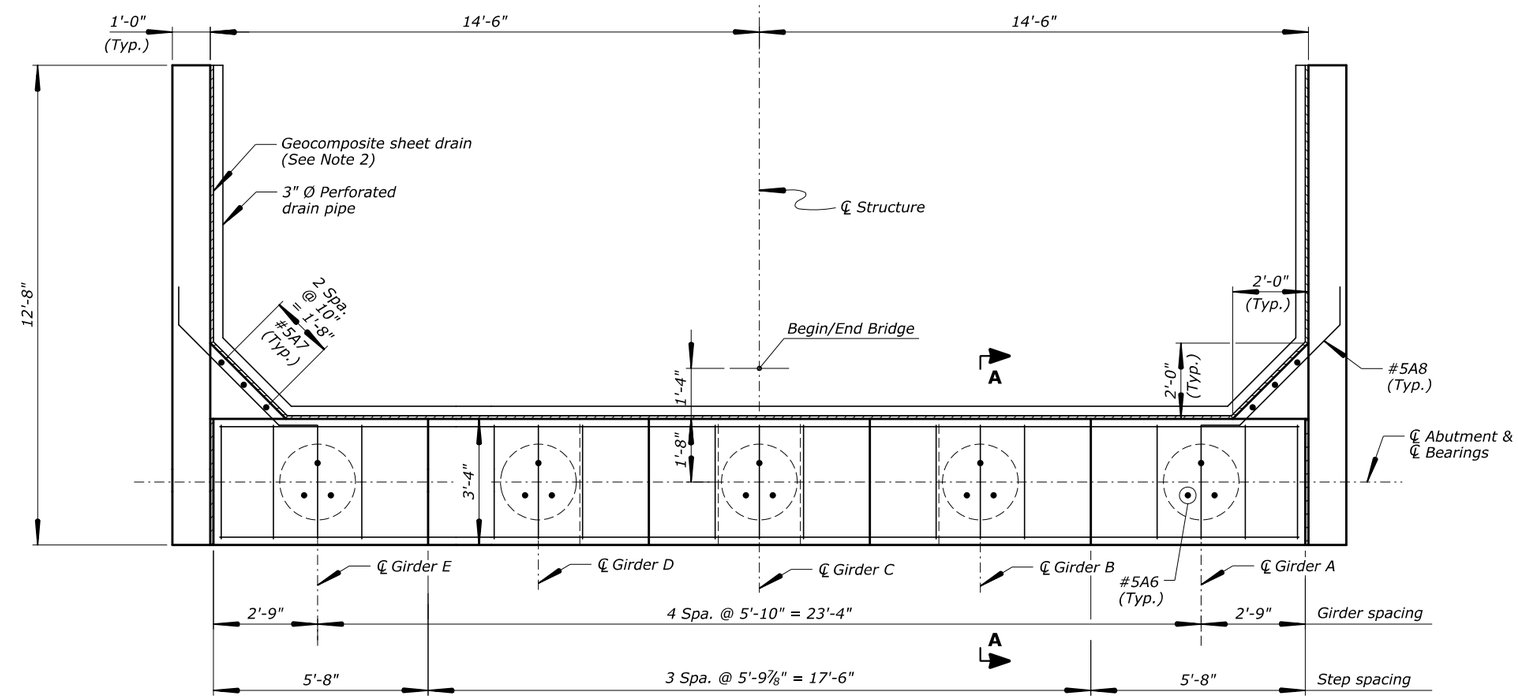

PLAN
Scale: ½" = 1'
(Abutment 1 shown, Abutment 2 similar)

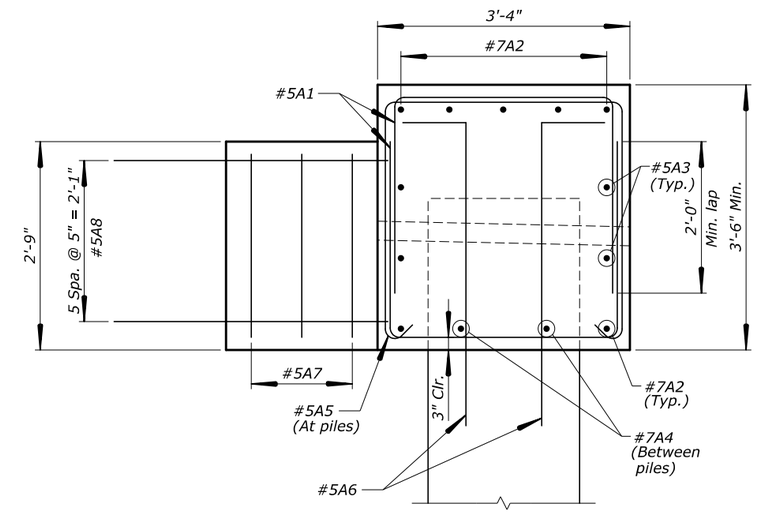

SECTION A-A
Scale: 1" = 1'

BEARING SEAT ELEVATIONS

GIRDER	ABUT. 1	ABUT. 2
A	428.47	427.04
B	428.59	427.15
C	428.71	427.27
D	428.59	427.15
E	428.47	427.04

Notes:

1. *See "ABUTMENT WINGWALL" sheet for wingwall details and elevations.*
2. *Install continuous geocomposite sheet drain and 3" dia. perforated drain pipe behind wingwalls and abutment. Cap ends of pipe. Tie perforated wingwall pipes to perforated abutment pipe and daylight through weep holes at face of abutment.*
3. *Cast shear block after girders have been set. Roughen surface of cap at shear block locations. See "ABUTMENT WINGWALL" sheet for details.*

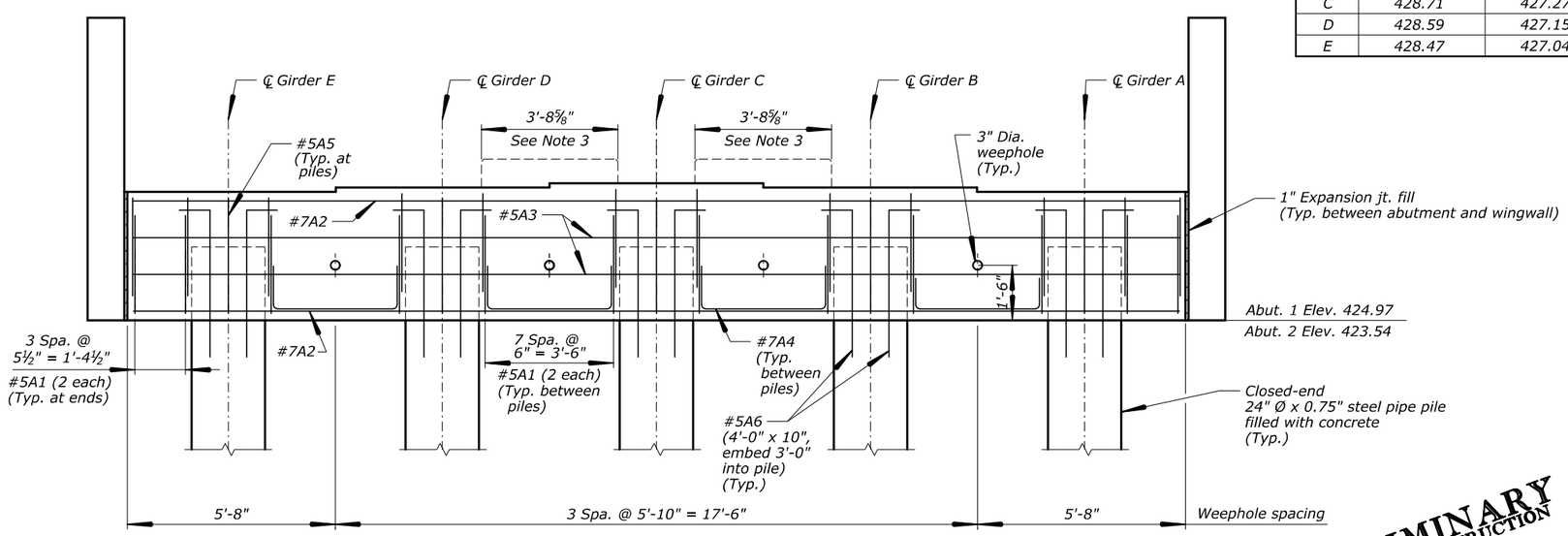

ELEVATION
Scale: ½" = 1'
(Abutment 1 shown, Abutment 2 similar)

PRELIMINARY
NOT FOR CONSTRUCTION

U.S. DEPARTMENT OF TRANSPORTATION
FEDERAL HIGHWAY ADMINISTRATION
WESTERN FEDERAL LANDS HIGHWAY DIVISION

OLYMPIC NATIONAL PARK

CANYON CREEK BRIDGE

ABUTMENT LAYOUT

NO.	DATE	BY	REVISIONS	NO.	DATE	BY	REVISIONS	DESIGNED BY	DRAWN BY	CHECKED BY	SCALE	PROJECT TEAM LEADER	BRIDGE DRAWING	DATE	DRAWING NO.
								AR	BSK		As Shown	George Choubah	4 of 18	March 2017	RG2106-D

70% PLAN IN HAND 04-18-2017

ACTUAL FILE: ABUT LAYOUT.DGN

M:\PROJECTS_ACCESS\WA\JEFF_91420(1)\Bridge\Microstation\Bridge Design Files\0_0PROJECTS.dgn

12-Apr-2017 10:03 AM

REGION	STATE	PROJECT	SHEET NO.
PW	WA	WA JEFF 91420(1)	G.23

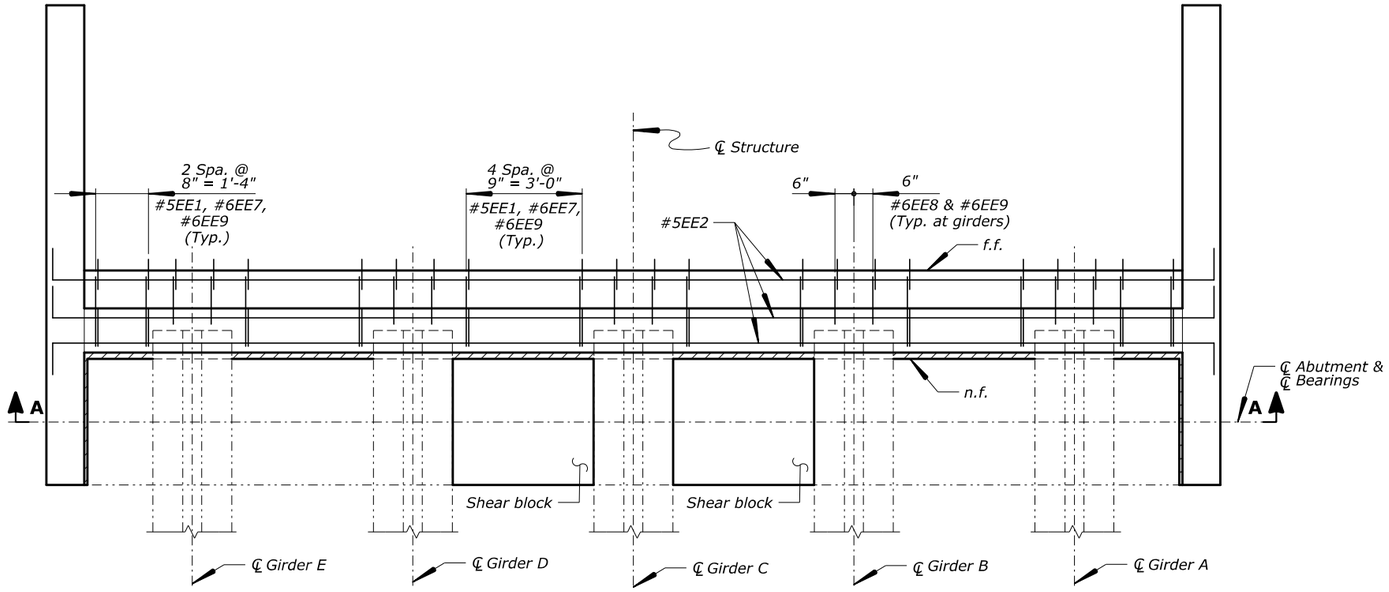

PLAN
Scale: ½" = 1'
(Abutment 1 shown, Abutment 2 similar)

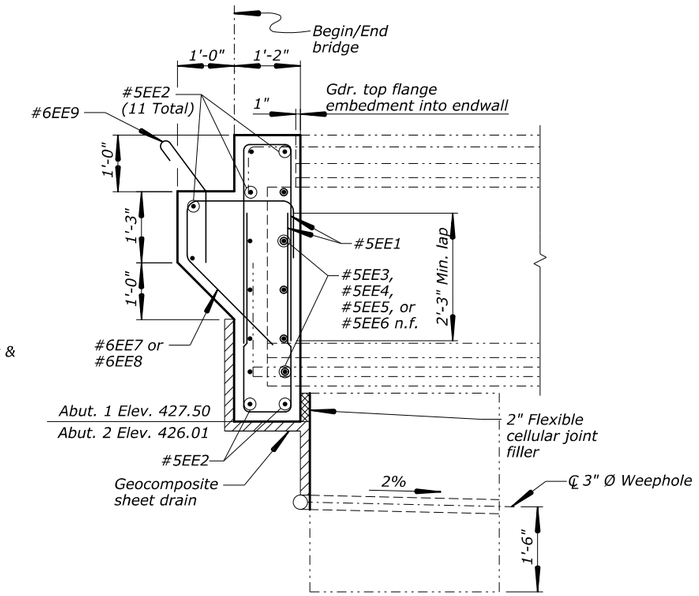

SECTION B-B
Scale: ¾" = 1'-0"

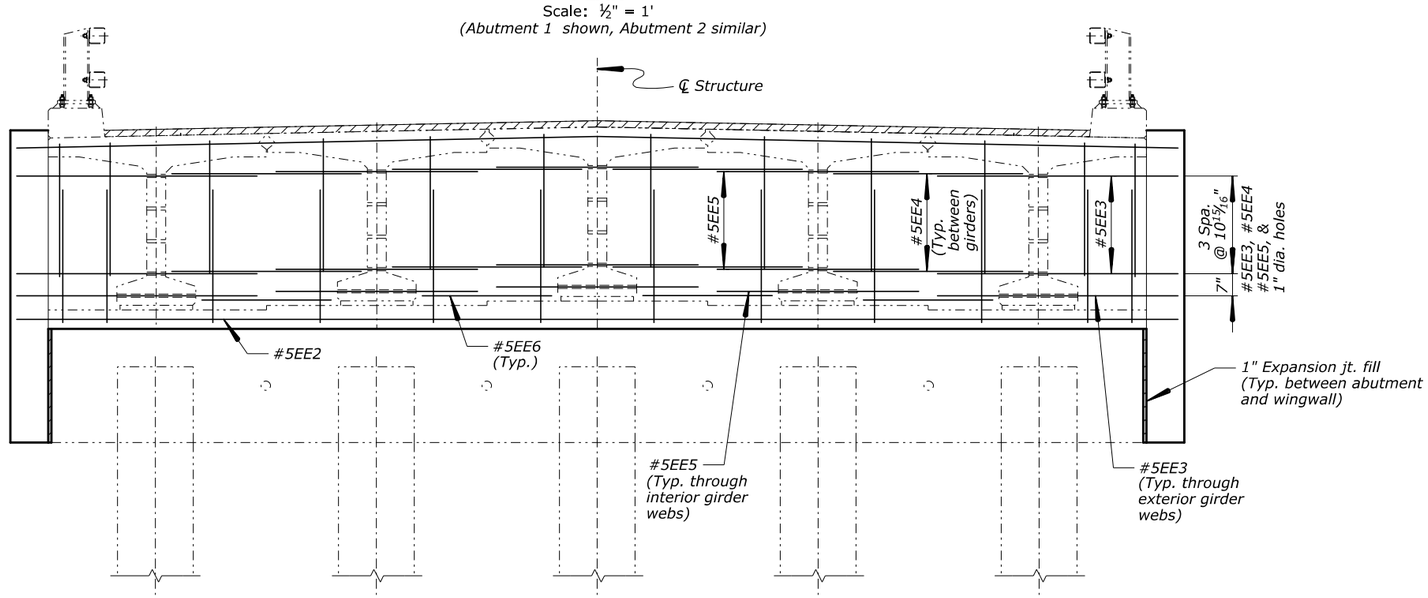

VIEW A-A
Scale: ½" = 1'
(Abutment 1 shown, Abutment 2 similar)

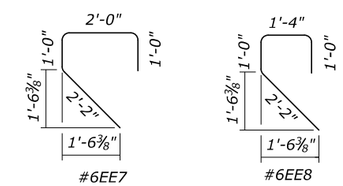

Key:
n.f. = near face
f.f. = far face
e.f. = each face

70% PLAN IN HAND 04-18-2017

PRELIMINARY NOT FOR CONSTRUCTION

U.S. DEPARTMENT OF TRANSPORTATION
FEDERAL HIGHWAY ADMINISTRATION
WESTERN FEDERAL LANDS HIGHWAY DIVISION

OLYMPIC NATIONAL PARK

CANYON CREEK BRIDGE

ABUTMENT ENDWALL

NO.	DATE	BY	REVISIONS	NO.	DATE	BY	REVISIONS	DESIGNED BY	DRAWN BY	CHECKED BY	SCALE	PROJECT TEAM LEADER	BRIDGE DRAWING	DATE	DRAWING NO.
								AR	BSK		As Shown	George Choubah	5 of 18	March 2017	RG3106-E

M:\PROJECTS_ACCESS\WAWA_JEFF_91420(1)\Bridge\Microstation\Bridge Design Files\0_0PROJECTS.dgn ACTUAL FILE: ABUT ENDWALL.DGN
17-Mar-2017 10:11 AM

REGION	STATE	PROJECT	SHEET NO.
PW	WA	WA JEFF 91420(1)	G.24

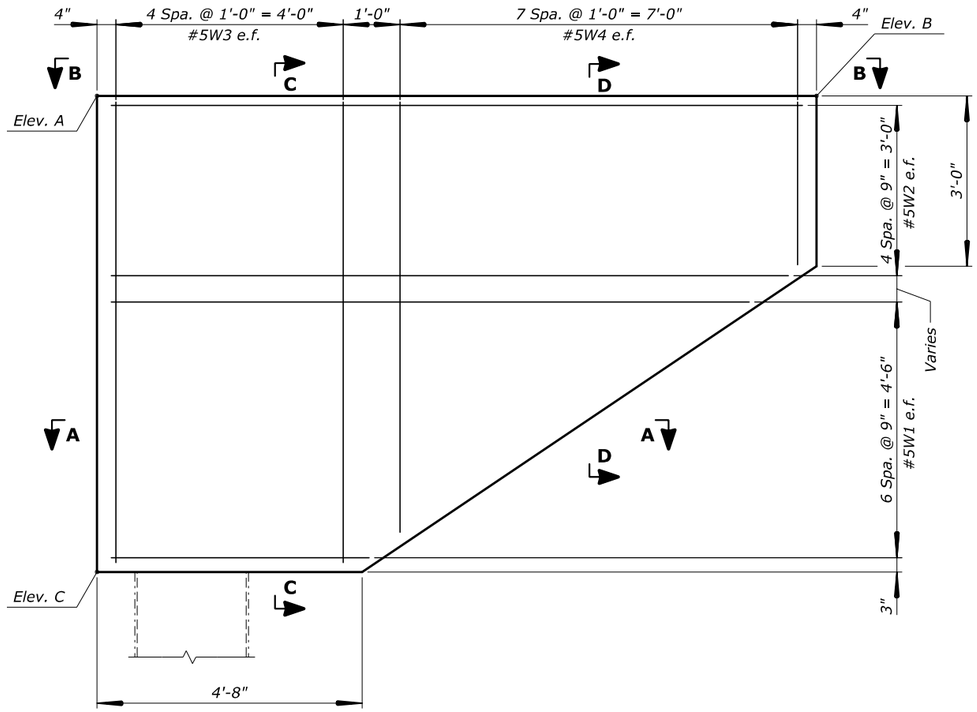

ELEVATION
Scale: ¾" = 1'-0"

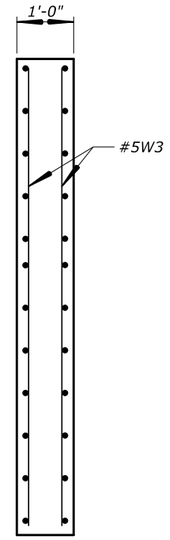

SECTION C-C
Scale: ¾" = 1'-0"

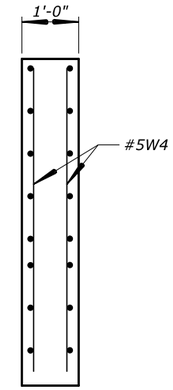

SECTION D-D
Scale: ¾" = 1'-0"

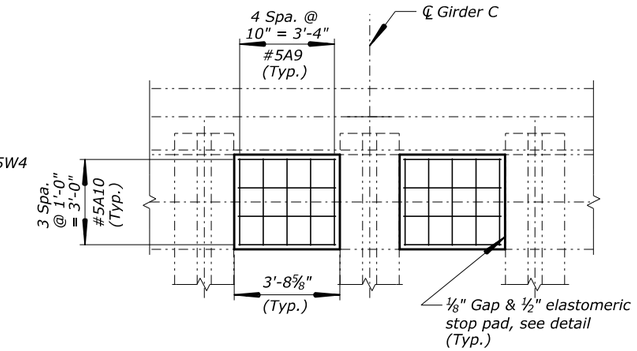

SHEAR BLOCK PLAN
Scale: ⅜" = 1'-0"

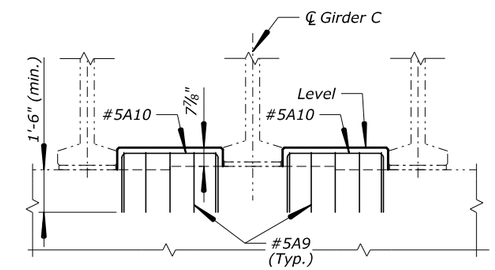

SHEAR BLOCK ELEVATION
Scale: ⅜" = 1'-0"

ELEVATIONS		
ELEV.	WING. 1 & 2	WING. 3 & 4
A	433.19	431.80
B	433.35	431.64
C	424.97	423.54

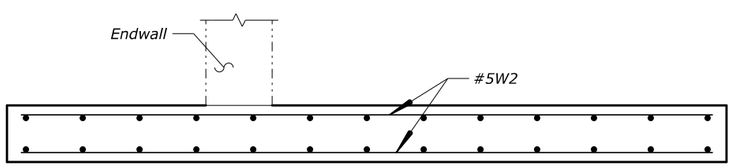

SECTION B-B
Scale: ¾" = 1'-0"

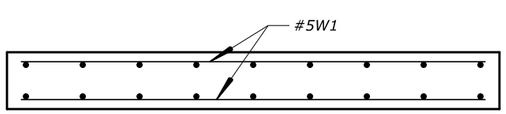

SECTION A-A
Scale: ¾" = 1'-0"

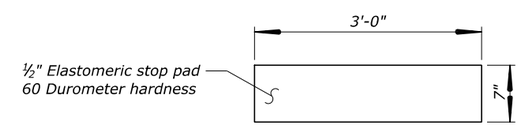

ELASTOMERIC STOP PAD DETAIL
No Scale
(8 req'd)

Notes:

1. *Cast concrete for shear blocks after placement of girders.*
2. *Place elastomeric pads after constructing shear blocks. Coat pads with approved cementitions adhesive prior to installation.*

Key:
n.f. = near face
f.f. = far face
e.f. = each face

PRELIMINARY
NOT FOR CONSTRUCTION

U.S. DEPARTMENT OF TRANSPORTATION
FEDERAL HIGHWAY ADMINISTRATION
WESTERN FEDERAL LANDS HIGHWAY DIVISION

OLYMPIC NATIONAL PARK

CANYON CREEK BRIDGE

ABUTMENT WINGWALL

NO.	DATE	BY	REVISIONS	NO.	DATE	BY	REVISIONS	DESIGNED BY	DRAWN BY	CHECKED BY	SCALE	PROJECT TEAM LEADER	BRIDGE DRAWING	DATE	DRAWING NO.
								AR	BSK		As Shown	George Choubah	6 of 18	March 2017	RG3106-F

70% PLAN IN HAND 04-18-2017
ACTUAL FILE: ABUT WINGWALL.DGN
M:\PROJECTS_ACCESS\WA\WA_JEFF_91420(1)\Bridge\Microstation\Bridge Design Files\0_0PROJECTS.dgn
17-Mar-2017 10:12 AM

REGION	STATE	PROJECT	SHEET NO.
PW	WA	WA JEFF 91420(1)	G.25

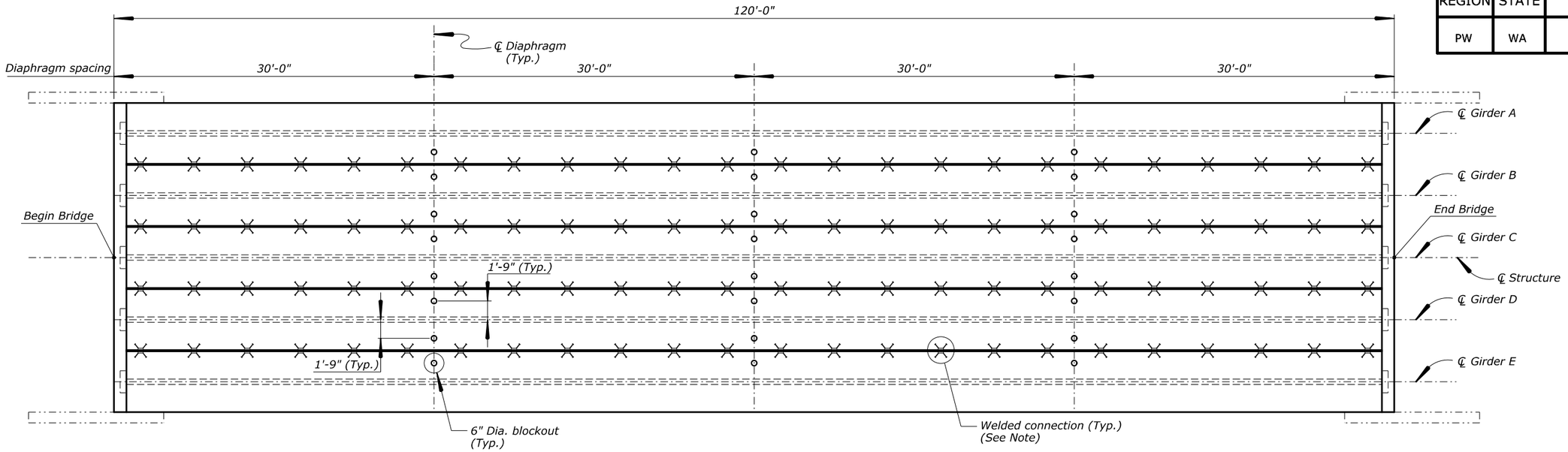

FRAMING PLAN
Scale: 3/16" = 1'

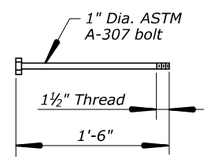

DIAPHRAGM ANCHOR BOLT
No Scale

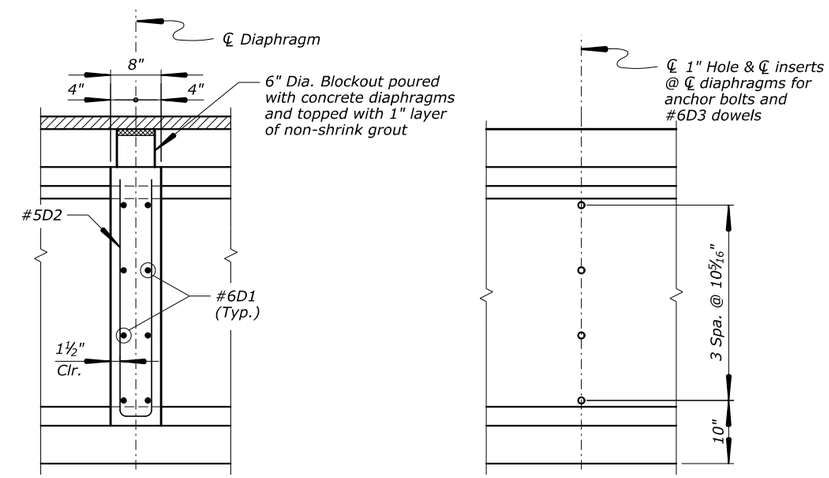

SECTION A-A
Scale: 1" = 1'

GIRDER PARTIAL ELEVATION
Scale: 1" = 1'

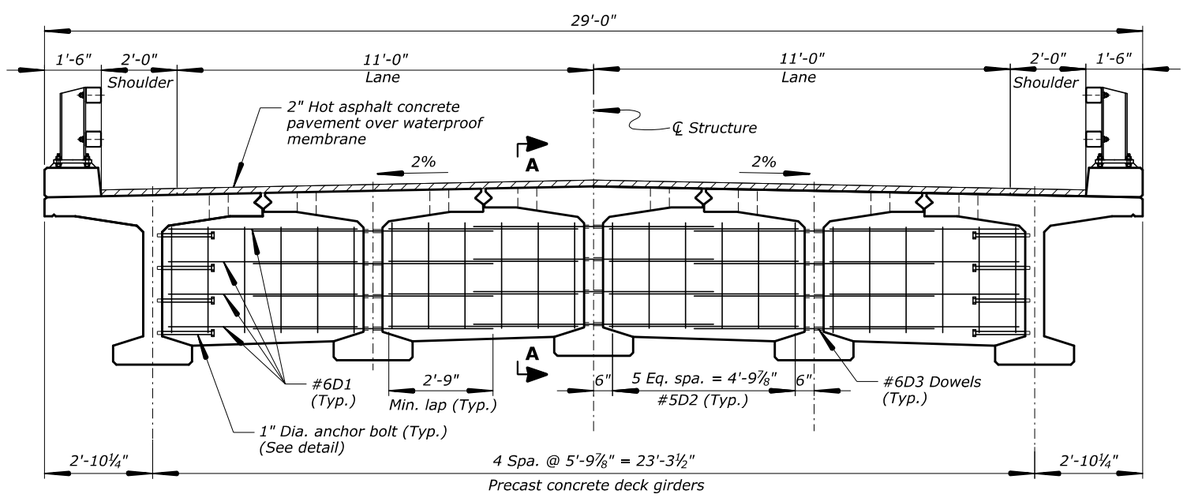

TYPICAL SECTION
Scale: ½" = 1'

Note:

See "GIRDER DETAILS" sheet for welded connection details. See "EXTERIOR GIRDER TOP FLANGE" and "INTERIOR GIRDER TOP FLANGE" sheets for welded connection spacing.

PRELIMINARY NOT FOR CONSTRUCTION

70% PLAN IN HAND 04-18-2017

U.S. DEPARTMENT OF TRANSPORTATION
FEDERAL HIGHWAY ADMINISTRATION
WESTERN FEDERAL LANDS HIGHWAY DIVISION

OLYMPIC NATIONAL PARK

CANYON CREEK BRIDGE

TYPICAL SECTION AND FRAMING PLAN

NO.	DATE	BY	REVISIONS	NO.	DATE	BY	REVISIONS	DESIGNED BY	DRAWN BY	CHECKED BY	SCALE	PROJECT TEAM LEADER	BRIDGE DRAWING	DATE	DRAWING NO.
								AR	BSK		As Shown	George Choubah	7 of 18	March 2017	RG3106-G

ACTUAL FILE: TYPXS.DGN
M:\PROJECTS_ACCESS\WA\WA_JEFF_91420(1)\Bridge\Microstation\Bridge Design Files\0_OPROJECTS.dgn
17-Mar-2017 10:12 AM

REGION	STATE	PROJECT	SHEET NO.
PW	WA	WA JEFF 91420(1)	G.26

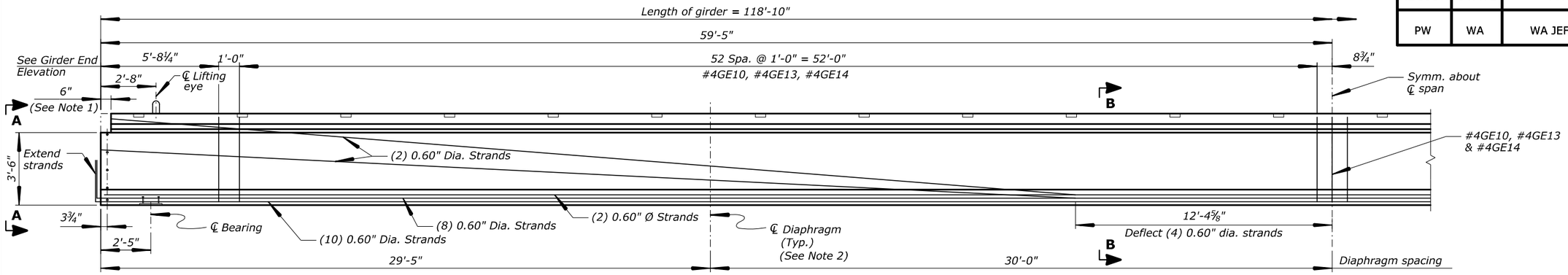

HALF GIRDER ELEVATION

Scale: ⅜" = 1'

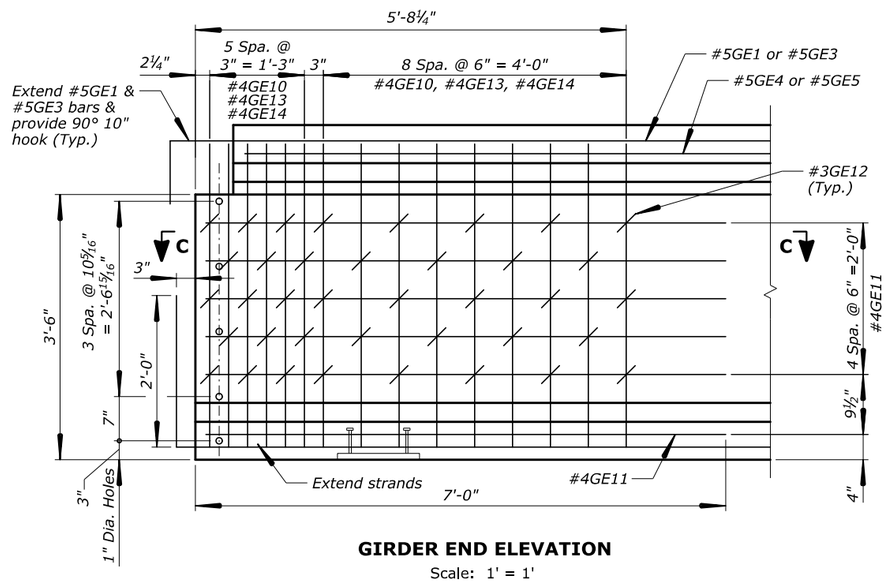

GIRDER END ELEVATION

Scale: 1' = 1'

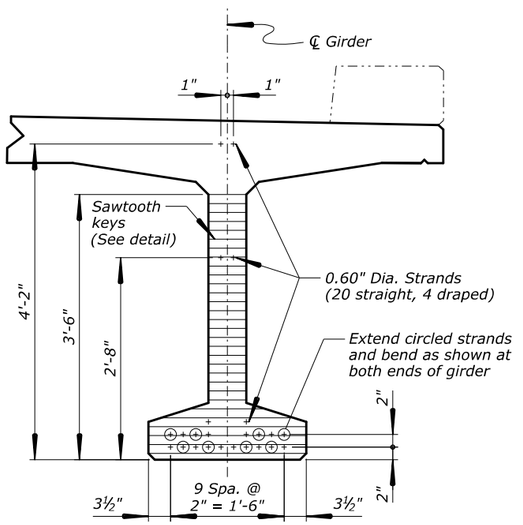

VIEW A-A

Scale: 1' = 1'

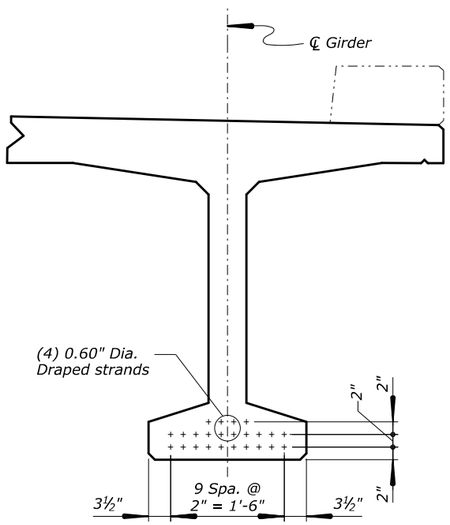

SECTION B-B

Scale: 1' = 1'

Notes:

1. Blockout full girder flange width at both ends.
2. See "TYPICAL SECTION AND FRAMING PLAN" sheet for diaphragm layout and details.

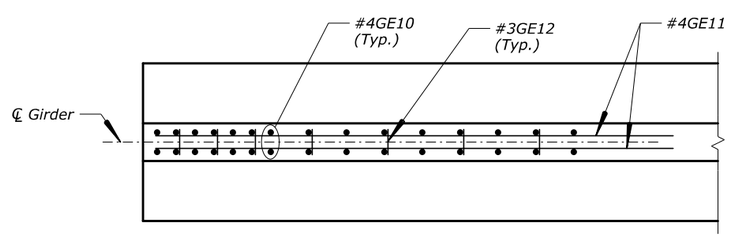

SECTION C-C

Scale: 1' = 1'

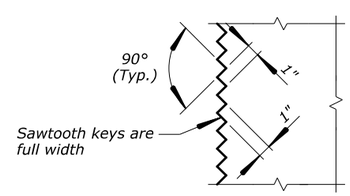

SAWTOOTH KEY DETAIL

No Scale

PRELIMINARY
NOT FOR CONSTRUCTION

U.S. DEPARTMENT OF TRANSPORTATION
FEDERAL HIGHWAY ADMINISTRATION
WESTERN FEDERAL LANDS HIGHWAY DIVISION

OLYMPIC NATIONAL PARK

CANYON CREEK BRIDGE

EXTERIOR GIRDER

NO.	DATE	BY	REVISIONS	NO.	DATE	BY	REVISIONS	DESIGNED BY	DRAWN BY	CHECKED BY	SCALE	PROJECT TEAM LEADER	BRIDGE DRAWING	DATE	DRAWING NO.
								AR	BSK		As Shown	George Choubah	8 of 18	March 2017	RG3106-H

ACTUAL FILE: EXT GIRDER.DGN

M:\PROJECTS_ACCESS\WA\WA_JEFF_91420(1)\Bridge\Microstation\Bridge Design Files\0_0PROJECTS.dgn

17-Mar-2017 10:12 AM

70% PLAN IN HAND 04-18-2017

REGION	STATE	PROJECT	SHEET NO.
PW	WA	WA JEFF 91420(1)	G.27

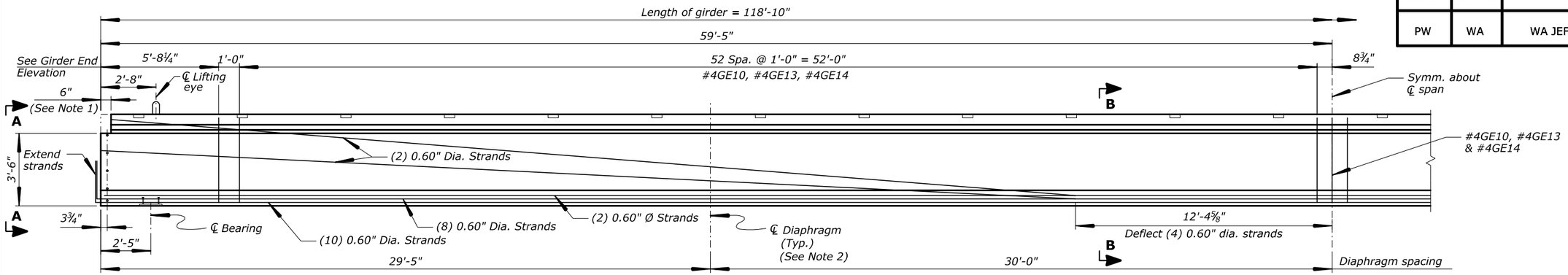

HALF GIRDER ELEVATION

Scale: ⅜" = 1'

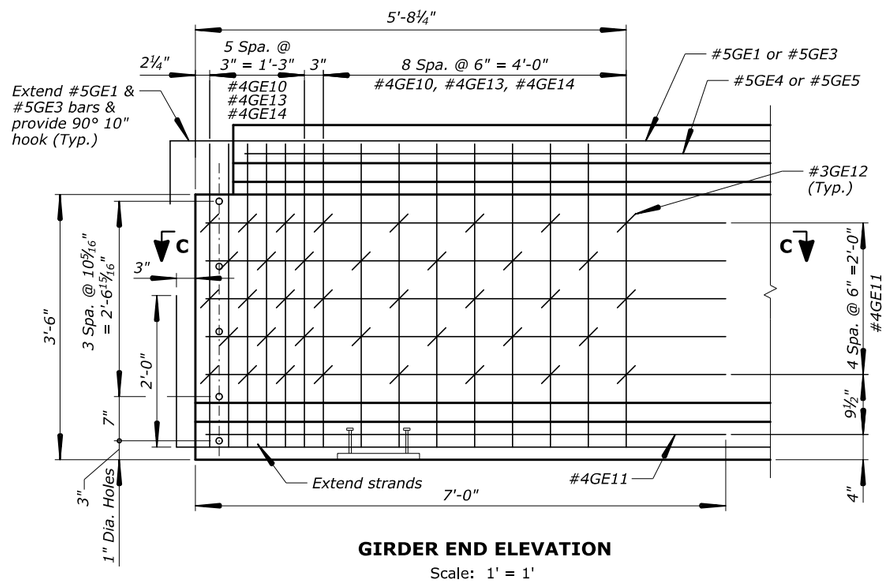

GIRDER END ELEVATION

Scale: 1' = 1'

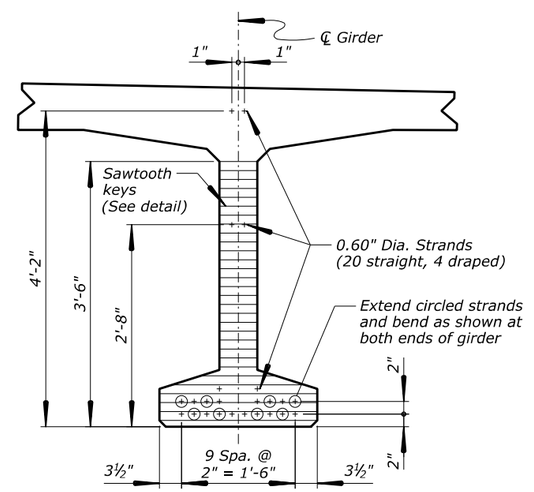

VIEW A-A

Scale: 1' = 1'

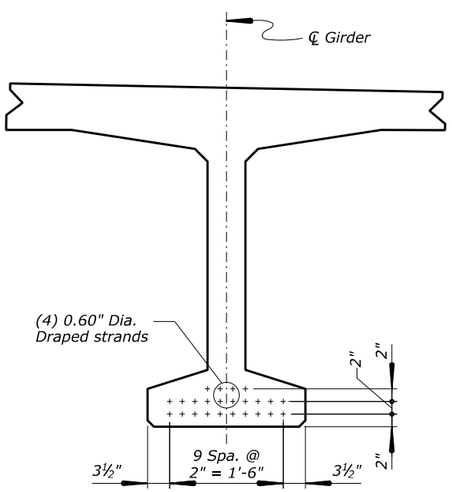

SECTION B-B

Scale: 1' = 1'

Notes:

1. *Blockout full girder flange width at both ends.*
2. *See "TYPICAL SECTION AND FRAMING PLAN" sheet for diaphragm layout and details.*

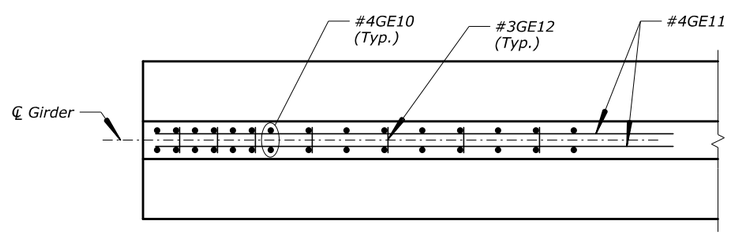

SECTION C-C

Scale: 1' = 1'

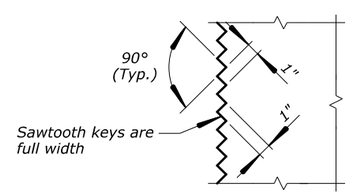

SAWTOOTH KEY DETAIL

No Scale

70% PLAN IN HAND 04-18-2017

PRELIMINARY NOT FOR CONSTRUCTION

U.S. DEPARTMENT OF TRANSPORTATION
FEDERAL HIGHWAY ADMINISTRATION
WESTERN FEDERAL LANDS HIGHWAY DIVISION

OLYMPIC NATIONAL PARK

CANYON CREEK BRIDGE

INTERIOR GIRDER

NO.	DATE	BY	REVISIONS	NO.	DATE	BY	REVISIONS	DESIGNED BY	DRAWN BY	CHECKED BY	SCALE	PROJECT TEAM LEADER	BRIDGE DRAWING	DATE	DRAWING NO.
								AR	BSK		As Shown	George Choubah	9 of 18	March 2017	RG3106-I

ACTUAL FILE: INT GIRDER.DGN
M:\PROJECTS_ACCESS\WA\WA_JEFF_91420(1)\Bridge\Microstation\Bridge Design Files\0_0PROJECTS.dgn
17-Mar-2017 10:12 AM

REGION	STATE	PROJECT	SHEET NO.
PW	WA	WA JEFF 91420(1)	G.28

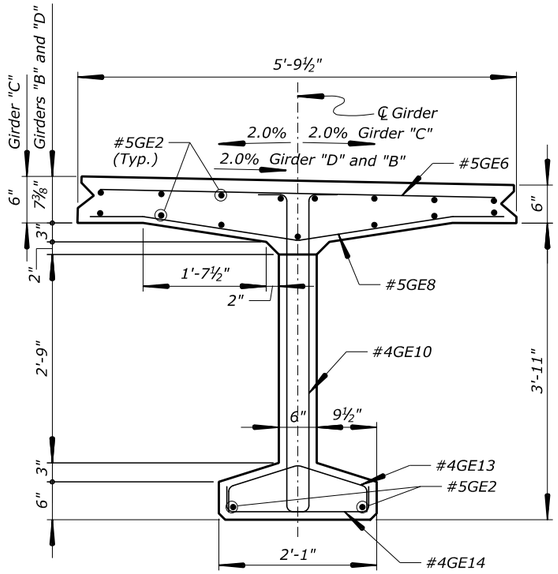

INTERIOR GIRDER MIDSPAN
(Girder "D" shown, Girders "B" and "C" similar)

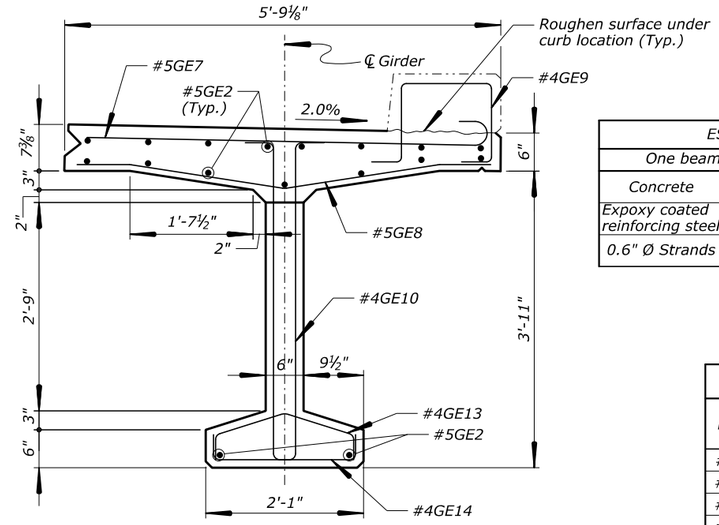

EXTERIOR GIRDER MIDSPAN
(Girder "E" shown, Girder "A" similar)

ESTIMATED QUANTITIES			
One beam only		Int. Girder	Ext. Girder
Concrete	Cu. Yd.	29.1	29.1
Expoxy coated reinforcing steel	Lbs.	5315	5770
0.6" Ø Strands	Ln. Ft.	2870	2870

Notes:

1. Cast girders ¼" longer than shown to allow for shortening due to prestressing.
2. Estimated camber at release of strands = 1¾".
3. Estimated camber after placing overlay and railing = 2¼".
3. After erection, cutoff lifting loops 1 inch below top of flange and fill with an approved non-shrink grout prior to placing overlay.
4. Thicken flange at both ends to compensate for final camber.
5. See "EXTERIOR GIRDER TOP FLANGE" and "INTERIOR GIRDER TOP FLANGE" sheets for top flange and curb bars.

REINFORCING STEEL SCHEDULE											
MARK	TYPE	DIMENSION									
		A	B	C	D	E	F	G	H	K	O
#5GE1	2	10"	43'-0"	---	---	---	---	---	---	---	---
#5GE2	STR	---	60'-0"	---	---	---	---	---	---	---	---
#5GE3	2	10"	22'-4"	---	---	---	---	---	---	---	---
#5GE4	STR	---	43'-0"	---	---	---	---	---	---	---	---
#5GE5	STR	---	22'-4"	---	---	---	---	---	---	---	---
#5GE6	STR	---	5'-8"	---	---	---	---	---	---	---	---
#5GE7	1	7"	5'-8"	---	---	---	---	---	---	---	---
#5GE8	81	---	9½"	2'-0¾"	9½"	---	---	---	3¾"	2'-0½"	5'-8"
#4GE9	S5	8"	1'-0"	1'-2¼"	1'-0"	---	---	8"	---	---	---
#4GE10	51	---	1'-1½"	4'-2⅛"	4"	4½"	---	---	---	---	---
#4GE11	STR	---	6'-10"	---	---	---	---	---	---	---	---
#3GE12	T9	4"	4"	---	---	---	---	4"	---	---	---
#4GE13	54	---	3¾"	11½"	11½"	3¾"	4"	---	4"	---	---
#4GE14	2	4"	4"	---	---	---	---	4"	---	---	---

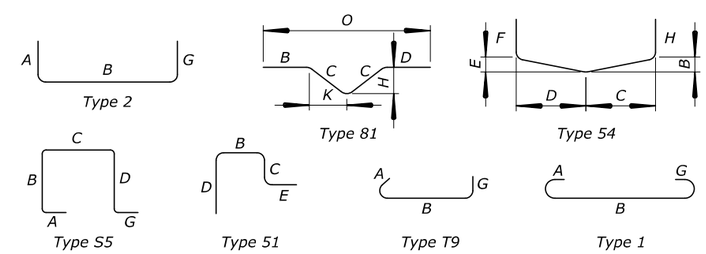

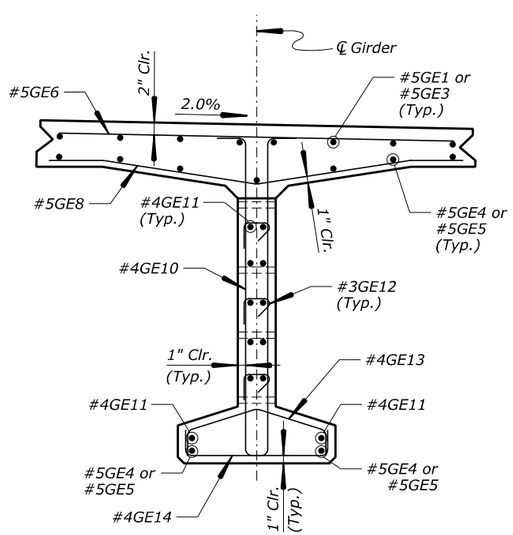

INTERIOR GIRDER END
(Girder "D" shown, Girders "B" and "C" similar)

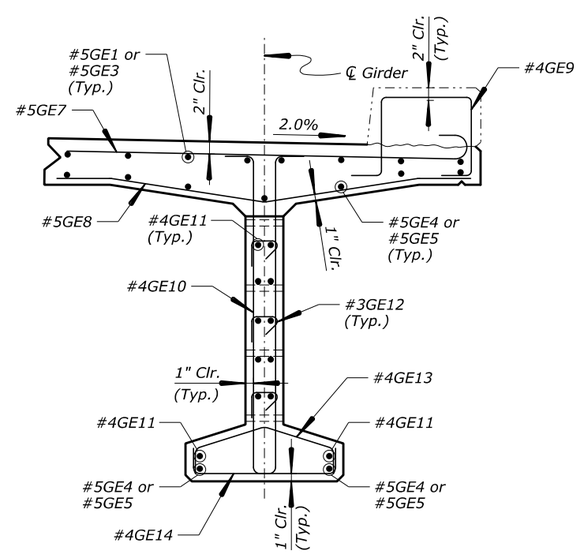

EXTERIOR GIRDER END
(Girder "E" shown, Girder "A" similar)

PRELIMINARY
NOT FOR CONSTRUCTION

U.S. DEPARTMENT OF TRANSPORTATION
FEDERAL HIGHWAY ADMINISTRATION
WESTERN FEDERAL LANDS HIGHWAY DIVISION

OLYMPIC NATIONAL PARK

CANYON CREEK BRIDGE

GIRDER SECTIONS

NO.	DATE	BY	REVISIONS	NO.	DATE	BY	REVISIONS	DESIGNED BY	DRAWN BY	CHECKED BY	SCALE	PROJECT TEAM LEADER	BRIDGE DRAWING	DATE	DRAWING NO.
								AR	BSK		1" = 1'	George Choubah	10 of 18	March 2017	RG3106-J

ACTUAL FILE: GIRDER SECT.DGN
M:\PROJECTS_ACCESS\WA\WA_JEFF_91420(1)\Bridge\Microstation\Bridge Design Files\0_0PROJECTS.dgn
17-Mar-2017 10:12 AM
70% PLAN IN HAND 04-18-2017

REGION	STATE	PROJECT	SHEET NO.
PW	WA	WA JEFF 91420(1)	G.29

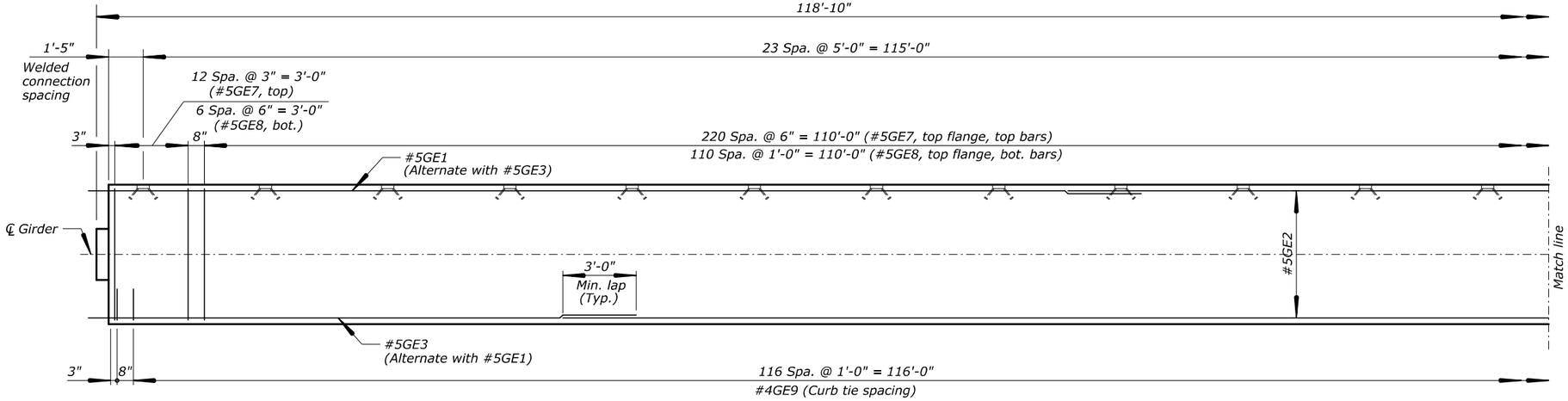

EXTERIOR GIRDER PLAN
(Girder E shown, Girder A similar)
Scale: ⅜" = 1'

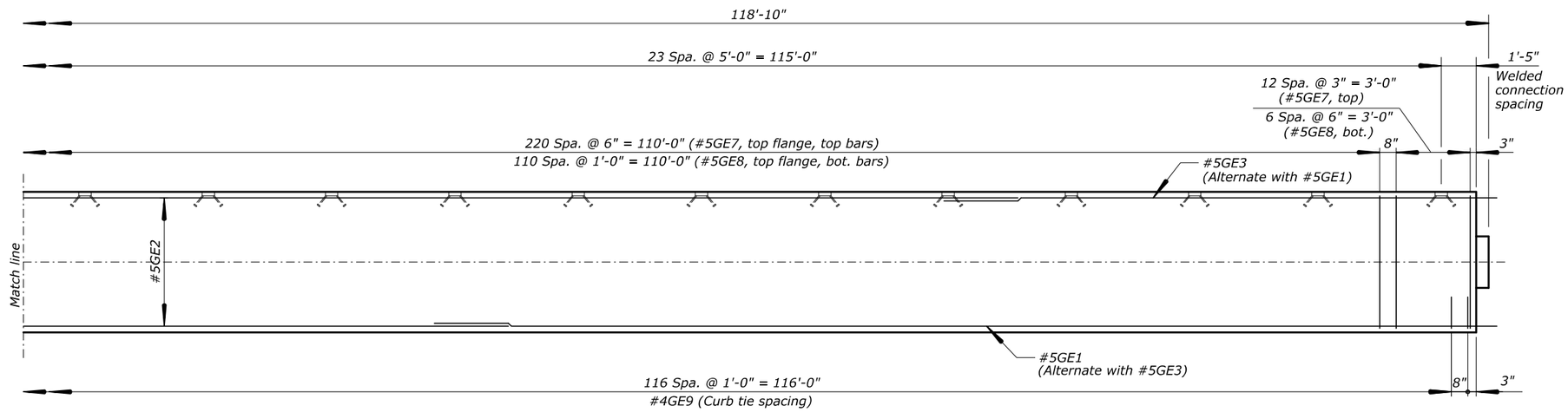

EXTERIOR GIRDER PLAN
(Girder E shown, Girder A similar)
Scale: ⅜" = 1'

Note:
Alternate all longitudinal bars to avoid adjacent splices in top and bottom flanges. Top flange-top bars shown. Top flange-bottom bars and top flange-top bars similar.

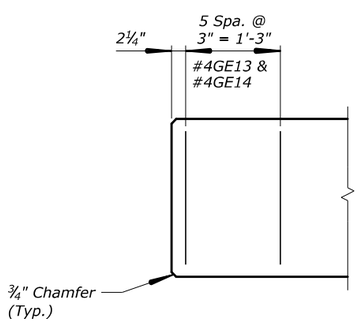

BOTTOM FLANGE PLAN
Scale: 1" = 1'

PRELIMINARY
NOT FOR CONSTRUCTION

70% PLAN IN HAND 04-18-2017

U.S. DEPARTMENT OF TRANSPORTATION
FEDERAL HIGHWAY ADMINISTRATION
WESTERN FEDERAL LANDS HIGHWAY DIVISION

OLYMPIC NATIONAL PARK

CANYON CREEK BRIDGE

EXTERIOR GIRDER TOP FLANGE

NO.	DATE	BY	REVISIONS	NO.	DATE	BY	REVISIONS	DESIGNED BY	DRAWN BY	CHECKED BY	SCALE	PROJECT TEAM LEADER	BRIDGE DRAWING	DATE	DRAWING NO.
								AR	BSK		As Shown	George Choubah	11 of 18	March 2017	RG3106-K

ACTUAL FILE: EXT TOP FLANGE.DGN
M:\PROJECTS_ACCESS\WA\WA_JEFF_91420(1)\Bridge\Microstation\Bridge Design Files\0_0PROJECTS.dgn
17-Mar-2017 10:13 AM

REGION	STATE	PROJECT	SHEET NO.
PW	WA	WA JEFF 91420(1)	G.30

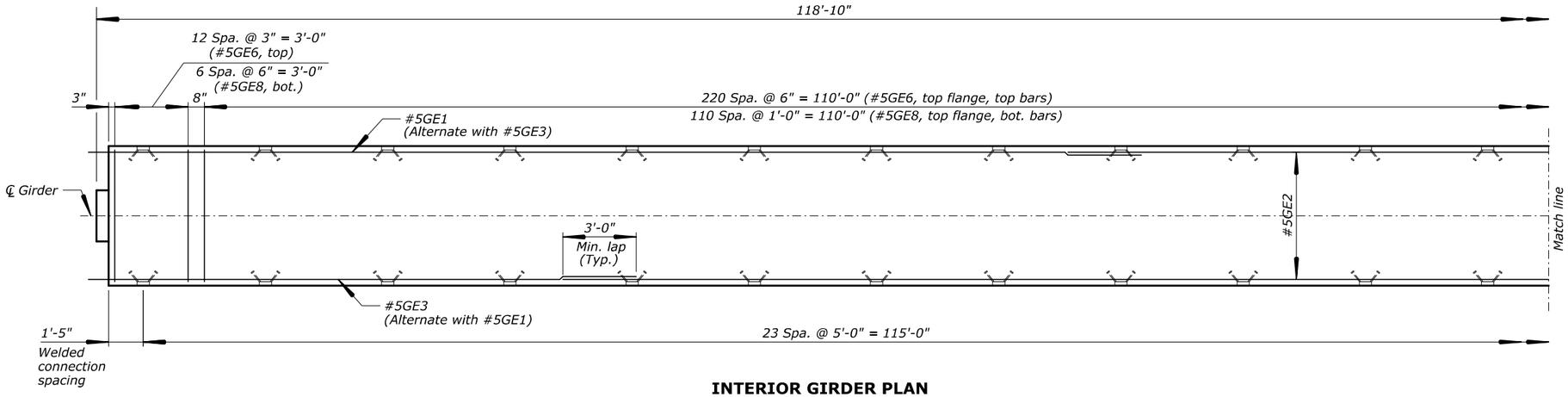

INTERIOR GIRDER PLAN

Scale: ⅜" = 1'

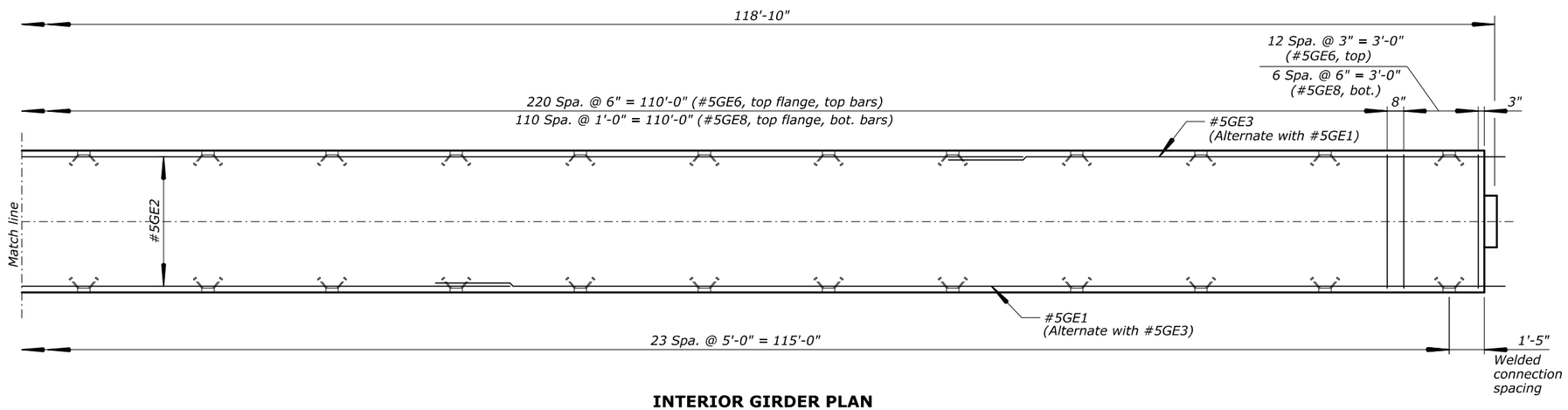

INTERIOR GIRDER PLAN

Scale: ⅜" = 1'

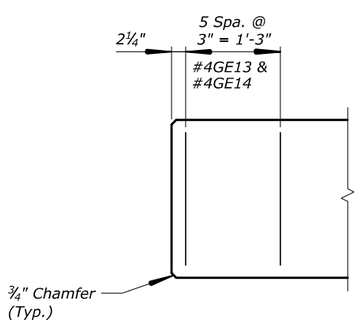

BOTTOM FLANGE PLAN

Scale: 1" = 1'

Note:

Alternate all longitudinal bars to avoid adjacent splices in top and bottom flanges. Top flange-top bars shown. Top flange-bottom bars and top flange-top bars similar.

PRELIMINARY
NOT FOR CONSTRUCTION

U.S. DEPARTMENT OF TRANSPORTATION
FEDERAL HIGHWAY ADMINISTRATION
WESTERN FEDERAL LANDS HIGHWAY DIVISION

OLYMPIC NATIONAL PARK

CANYON CREEK BRIDGE

INTERIOR GIRDER TOP FLANGE

NO.	DATE	BY	REVISIONS	NO.	DATE	BY	REVISIONS	DESIGNED BY	DRAWN BY	CHECKED BY	SCALE	PROJECT TEAM LEADER	BRIDGE DRAWING	DATE	DRAWING NO.
								AR	BSK		As Shown	George Choubah	12 of 18	March 2017	RG3106-L

ACTUAL FILE: INT TOP FLANGE.DGN
M:\PROJECTS_ACCESS\WA\WA_JEFF_91420(1)\Bridge\Microstation\Bridge Design Files\0_0PROJECTS.dgn
17-Mar-2017 10:20 AM
70% PLAN IN HAND 04-18-2017

REGION	STATE	PROJECT	SHEET NO.
PW	WA	WA JEFF 91420(1)	G.31

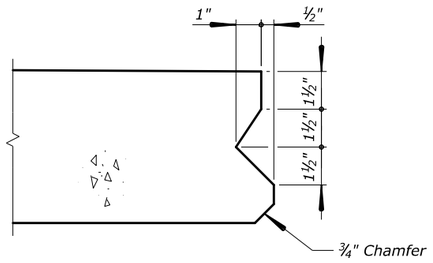

FLANGE KEY DETAIL

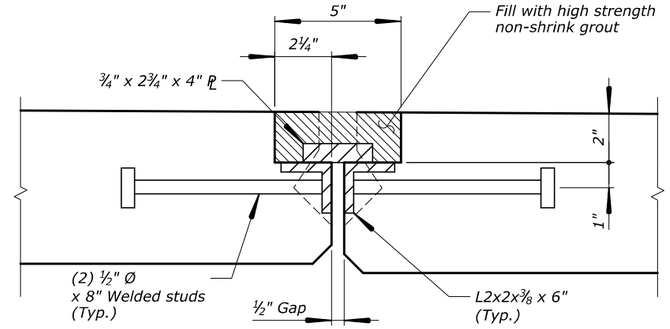

SECTION A-A

Note:

Conform to AASHTO M 251 for steel reinforced elastomeric bearing pads. Provide 60 Durometer hardness, elastomer Grade 3 or higher.

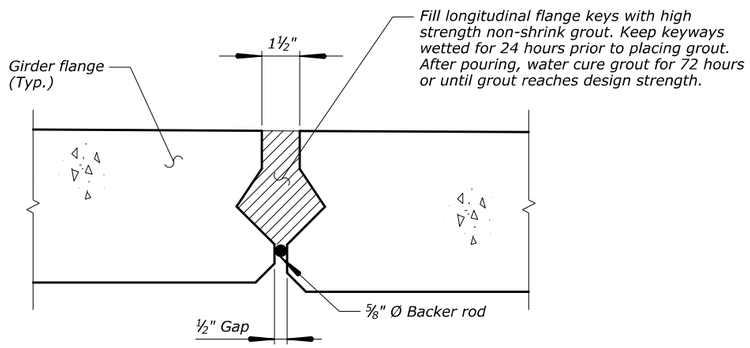

FLANGE KEY BETWEEN CONNECTIONS

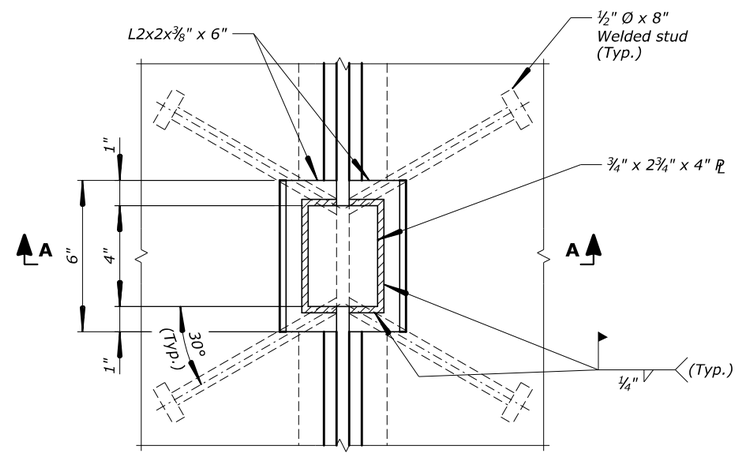

WELDED CONNECTION DETAIL

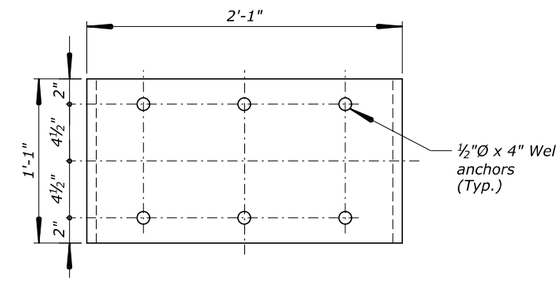

BEARING PLATE PLAN

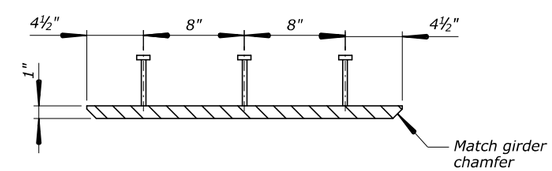

BEARING PLATE ELEVATION
(10 Req'd)

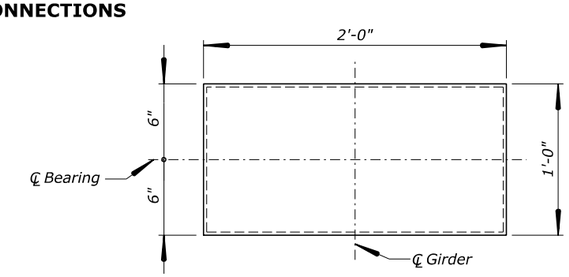

BEARING PAD PLAN

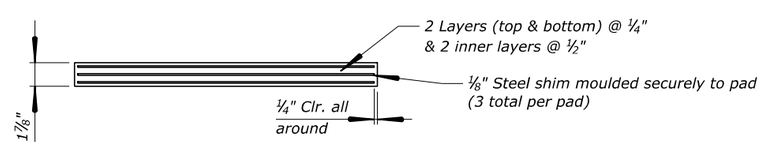

BEARING PAD ELEVATION
(10 Req'd)

PRELIMINARY
NOT FOR CONSTRUCTION

70% PLAN IN HAND 04-18-2017

U.S. DEPARTMENT OF TRANSPORTATION
FEDERAL HIGHWAY ADMINISTRATION
WESTERN FEDERAL LANDS HIGHWAY DIVISION

OLYMPIC NATIONAL PARK

CANYON CREEK BRIDGE

GIRDER DETAILS

NO.	DATE	BY	REVISIONS	NO.	DATE	BY	REVISIONS	DESIGNED BY	DRAWN BY	CHECKED BY	SCALE	PROJECT TEAM LEADER	BRIDGE DRAWING	DATE	DRAWING NO.
								AR	BSK		No Scale	George Choubah	13 of 18	March 2017	RG3106-M

ACTUAL FILE: GIRDER DET.DGN
M:\PROJECTS_ACCESS\WAWA_JEFF_91420(1)\Bridge\Microstation\Bridge Design Files\0_0PROJECTS.dgn
17-Mar-2017 10:13 AM

REGION	STATE	PROJECT	SHEET NO.
PW	WA	WA JEFF 91420(1)	G.32

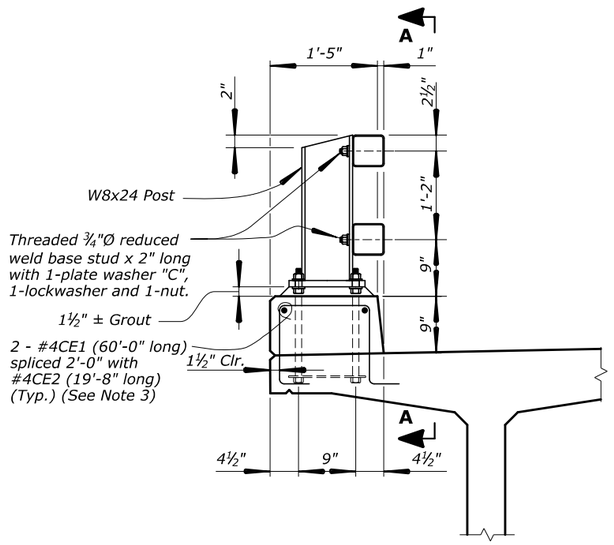

TYPICAL SECTION
Scale: 1" = 1'-0'

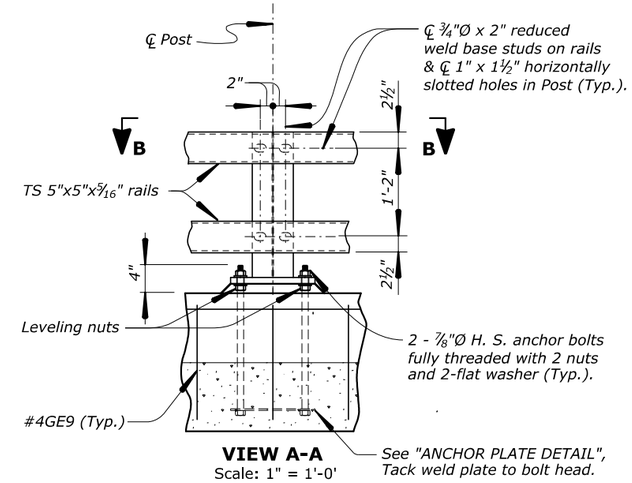

VIEW A-A
Scale: 1" = 1'-0'

BRIDGE RAILING NOTES:

GENERAL: The Alaska Multi-State Rail meets the TL-4 performance criteria.

MATERIALS: Steel Posts, base plates, plate washers, and splice sleeves shall conform to ASTM A36. Structural tubing for rails shall conform to ASTM A500 or A501, Grade B. All components of the bridge rail shall be hot-dip galvanized after fabrication in accordance with AASHTO M 111 or M 232.

FABRICATION: Structural steel shall be shop fabricated. Submit shop drawings to the CO for approval prior to fabrication. Welding shall conform to the ANSI/AASHTO/AWS, and shall be by a certified welder. Welding for welded stud bolts shall conform to ANSI/AASHTO/AWS. All steel shall be fabricated before being galvanized.

RAIL SPLICE ASSEMBLIES: Rail splice assemblies must be provided as shown on the plans. With rails continuous over two or more posts.

GROUT: Use grout that has a minimum 24 hours f'c of 3,000 psi.

ERECTION: No field cutting or welding is permitted unless approved by the CO. All rail Posts shall be set vertically and the railing erected parallel to the girder profile. Contractor shall furnish steel shim plates as required to align railing. The completed installation shall not reflect any unevenness in the structure.

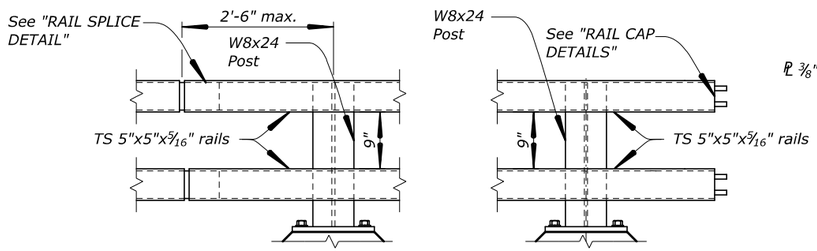

RAIL SPLICE
Scale: 1" = 1'-0'

END SECTION
Scale: 1" = 1'-0'

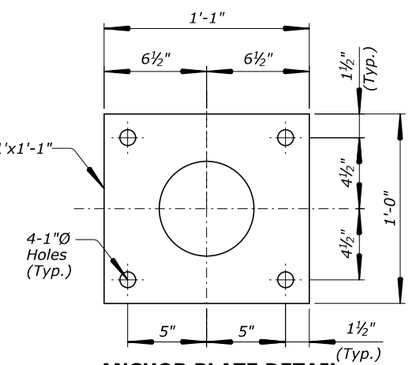

ANCHOR PLATE DETAIL
Not to scale

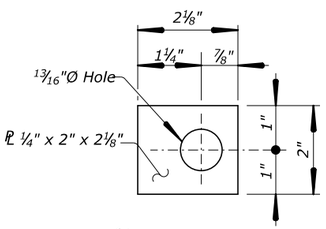

¼" PL WASHER "C"

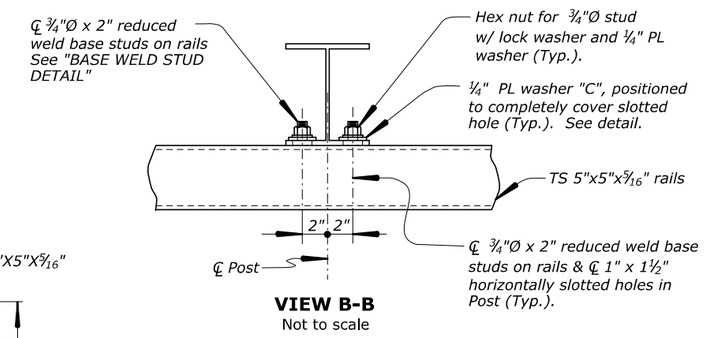

VIEW B-B
Not to scale

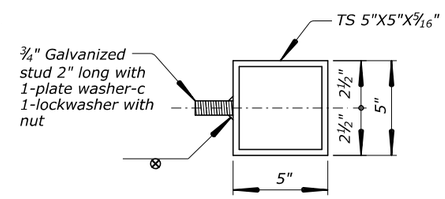

BASE WELD STUD DETAIL
Not to scale

Notes:

1. *Set top of Post 2'-8½" above finish grade.*
2. *See "GIRDER SECTIONS" and "EXTERIOR GIRDER TOP FLANGE" sheets for curb reinforcement.*
3. *Alternate longitudinal curb reinforcement to avoid adjacent splices similar to longitudinal deck reinforcement. Place curb reinforcement continuously from approach slab curb into bridge curb.*

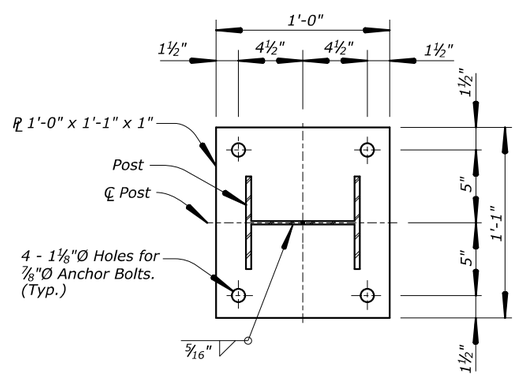

BASE PLATE DETAILS
Not to scale

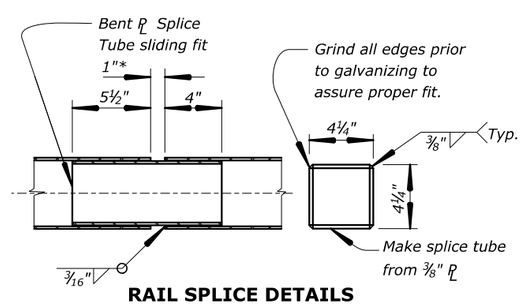

RAIL SPLICE DETAILS
Not to scale

* 1" Gap unless noted otherwise on detail plans.

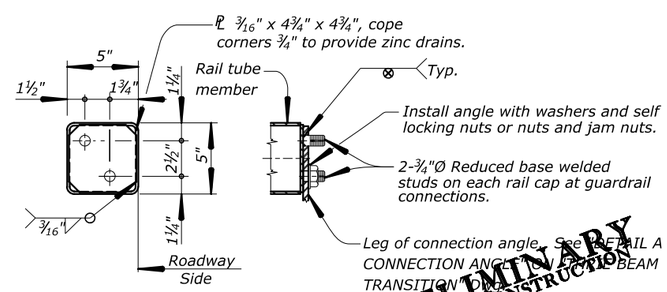

RAIL CAP DETAILS
Not to scale

PRELIMINARY
NOT FOR CONSTRUCTION

U.S. DEPARTMENT OF TRANSPORTATION
FEDERAL HIGHWAY ADMINISTRATION
WESTERN FEDERAL LANDS HIGHWAY DIVISION

OLYMPIC NATIONAL PARK

CANYON CREEK BRIDGE

BRIDGE RAILING

NO.	DATE	BY	REVISIONS	NO.	DATE	BY	REVISIONS	DESIGNED BY	DRAWN BY	CHECKED BY	SCALE	PROJECT TEAM LEADER	BRIDGE DRAWING	DATE	DRAWING NO.
								AR	AR		As Shown	George Choubah	14 of 18	March 2017	RG3106-N

70% PLAN IN HAND 04-18-2017

ACTUAL FILE: R14_WA_91420(1)_Bridge_Railing.DGN

M:\PROJECTS_ACCESS\WA\WA_JEFF_91420(1)\Bridge\Microstation\Bridge Design Files\0_0PROJECTS.dgn

17-Mar-2017 10:13 AM

REGION	STATE	PROJECT	SHEET NO.
PW	WA	WA JEFF 91420(1)	G.33

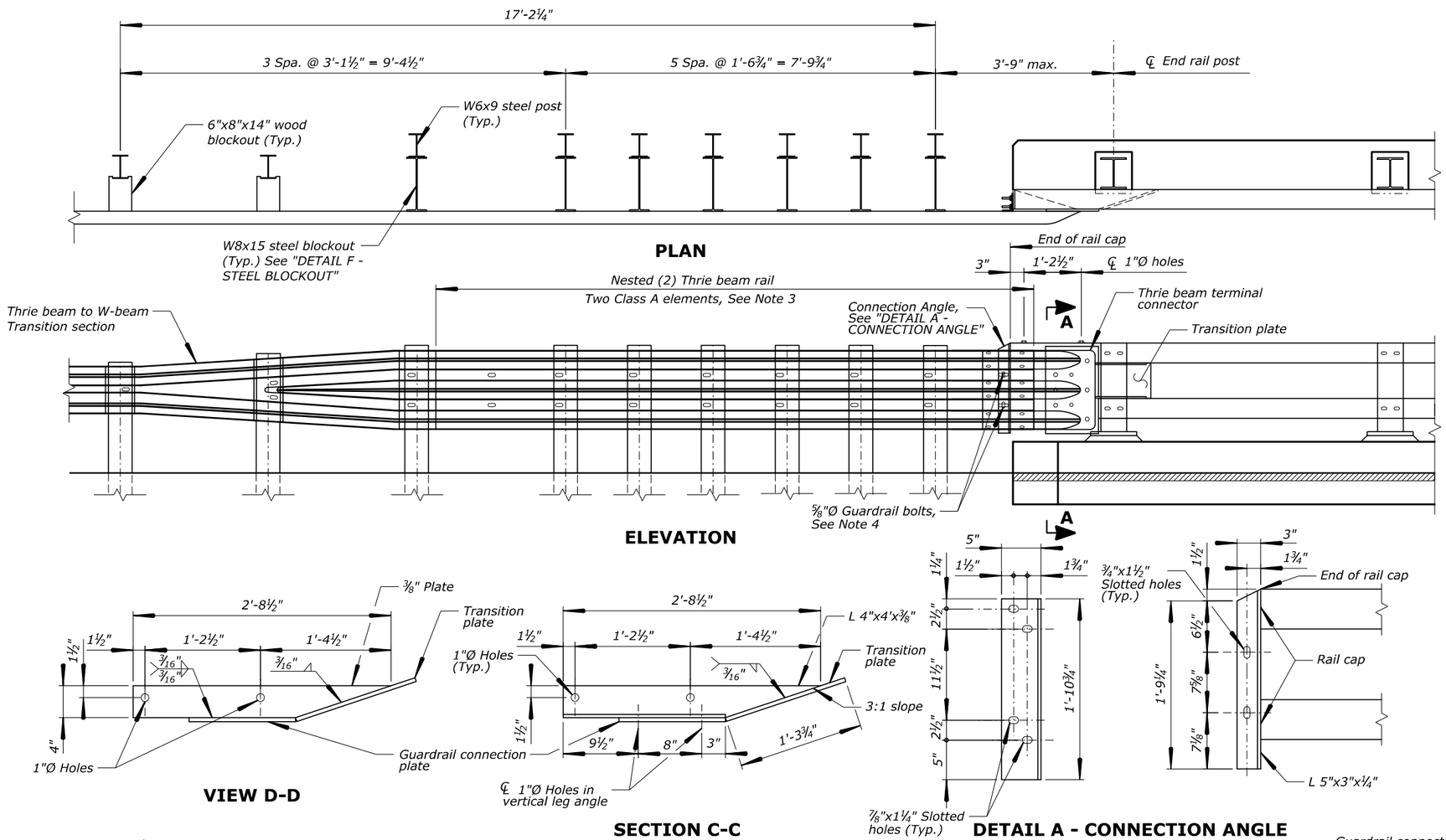

Notes:

1. All guardrail and guardrail connection hardware to conform to AASHTO M 180. All H.S. Bolts conform to ASTM A325. All other steel to conform to ASTM A709 Grade 36.
2. Conform to G-00, G-04S, G-25S for all guardrail details not shown.
3. Lap approach guardrail to prevent snags from oncoming traffic.
4. Provide 4½" horizontal slot in approach guardrail. Adjust guardrail bolts for sliding fit.
5. This design approved for NCHRP 350, TL-4.

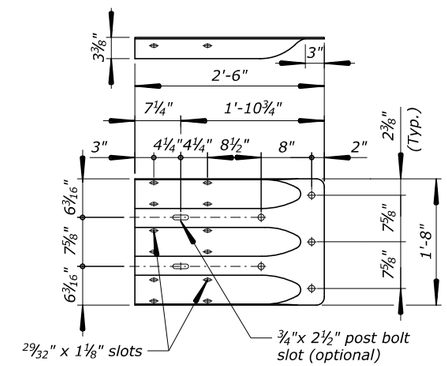

THRIE BEAM TERMINAL CONNECTOR

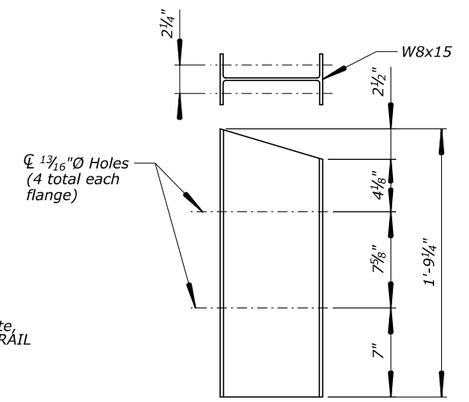

DETAIL F - STEEL BLOCKOUT

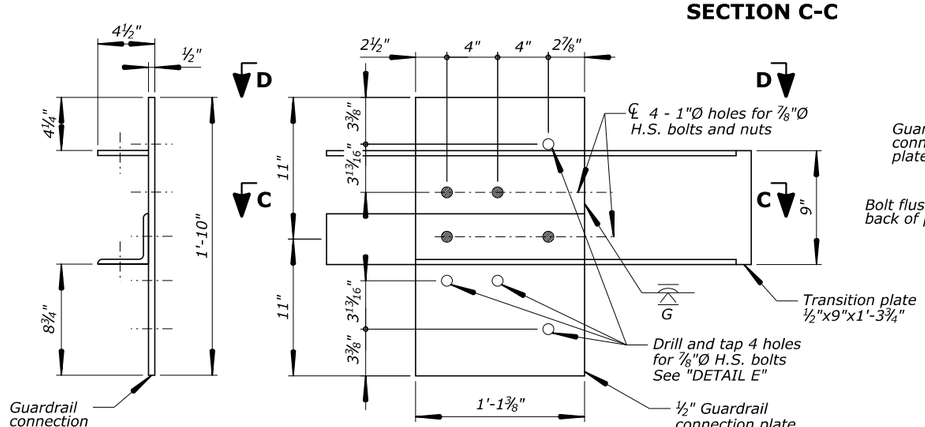

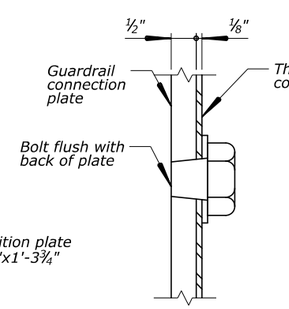

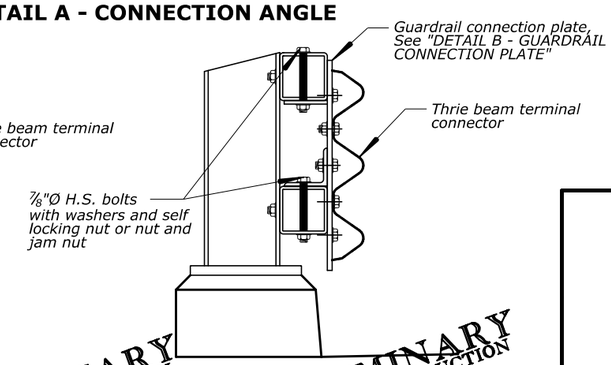

PRELIMINARY NOT FOR CONSTRUCTION

PRELIMINARY NOT FOR CONSTRUCTION

70% PLAN IN HAND 04-18-2017

U.S. DEPARTMENT OF TRANSPORTATION
FEDERAL HIGHWAY ADMINISTRATION
WESTERN FEDERAL LANDS HIGHWAY DIVISION

OLYMPIC NATIONAL PARK

CANYON CREEK BRIDGE

THRIE BEAM TRANSITION

NO.	DATE	BY	REVISIONS	NO.	DATE	BY	REVISIONS	DESIGNED BY	DRAWN BY	CHECKED BY	SCALE	PROJECT TEAM LEADER	BRIDGE DRAWING	DATE	DRAWING NO.
								AR	AR		No scale	George Choubah	15 of 18	March 2017	RG3106-O

ACTUAL FILE: R15_WA_91420(1)_Thrie_Beam_Rail.DGN
M:\PROJECTS_ACCESS\WA\WA_JEFF_91420(1)\Bridge\Microstation\Bridge Design Files\0_OPROJECTS.dgn
17-Mar-2017 10:52 AM

REGION	STATE	PROJECT	SHEET NO.
PW	WA	WA JEFF 91420(1)	G.34

TO BE PROVIDED

PRELIMINARY
NOT FOR CONSTRUCTION

U.S. DEPARTMENT OF TRANSPORTATION
FEDERAL HIGHWAY ADMINISTRATION
WESTERN FEDERAL LANDS HIGHWAY DIVISION

OLYMPIC NATIONAL PARK

CANYON CREEK BRIDGE

REINFORCING STEEL BAR LIST

NO.	DATE	BY	REVISIONS	NO.	DATE	BY	REVISIONS	DESIGNED BY	DRAWN BY	CHECKED BY	SCALE	PROJECT TEAM LEADER	BRIDGE DRAWING	DATE	DRAWING NO.
								AR			No Scale	George Choubah	16 of 18	March 2017	RG3106-P

17-Mar-2017 10:52 AM M:\PROJECTS_ACCESS\WA\WA_JEFF_91420(1)\Bridge\Microstation\Bridge Design Files\0_0PROJECTS.dgn ACTUAL FILE: REBAR.DGN

70% PLAN IN HAND 04-18-2017

REGION	STATE	PROJECT	SHEET NO.
PW	WA	WA JEFF 91420(1)	G.35

TO BE PROVIDED

70% PLAN IN HAND 04-18-2017

PRELIMINARY
NOT FOR CONSTRUCTION

U.S. DEPARTMENT OF TRANSPORTATION
FEDERAL HIGHWAY ADMINISTRATION
WESTERN FEDERAL LANDS HIGHWAY DIVISION

OLYMPIC NATIONAL PARK

CANYON CREEK BRIDGE

EPOXY COATED
REINFORCING STEEL BAR LIST

NO.	DATE	BY	REVISIONS	NO.	DATE	BY	REVISIONS	DESIGNED BY	DRAWN BY	CHECKED BY	SCALE	PROJECT TEAM LEADER	BRIDGE DRAWING	DATE	DRAWING NO.
								AR			No Scale	George Choubah	17 of 18	March 2017	RG3106-Q

17-Mar-2017 10:52 AM M:\PROJECTS_ACCESSWA\WA_JEFF_91420(1)\Bridge\Microstation\Bridge Design Files\0_0PROJECTS.dgn ACTUAL FILE: REBAR EPOXY.DGN

REGION	STATE	PROJECT	SHEET NO.
PW	WA	WA JEFF 91420(1)	G.36

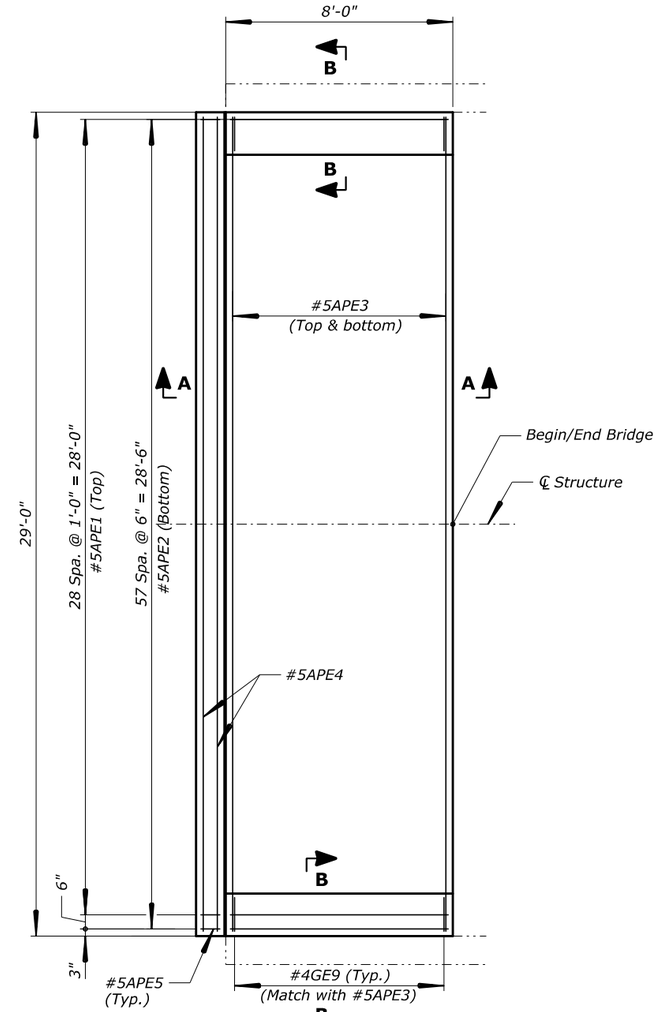

PLAN
Scale: ⅜" = 1'

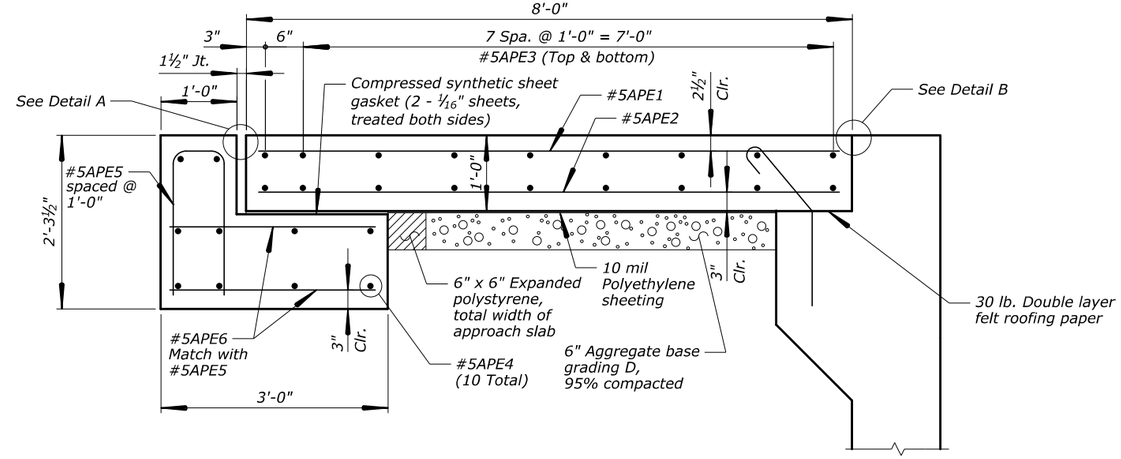

SECTION A-A
Scale: 1" = 1'

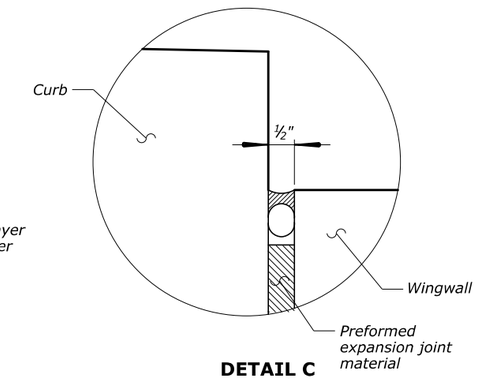

DETAIL C
No Scale

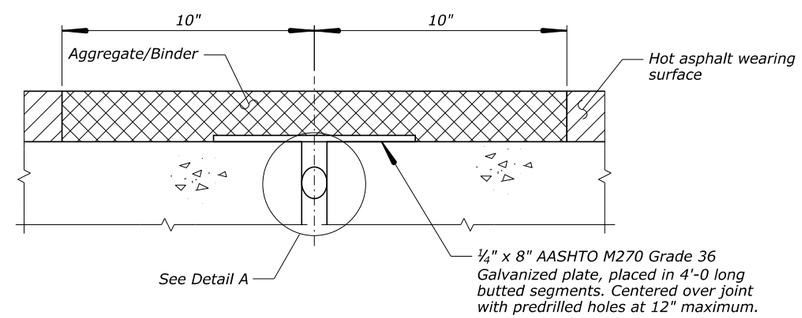

ASPHALT PLUG JOINT
No Scale

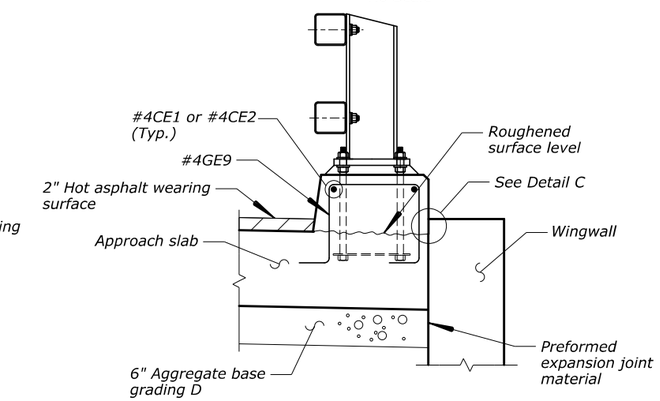

SECTION B-B
Scale: 1" = 1'

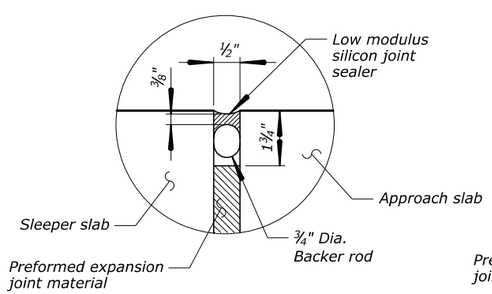

DETAIL A
No Scale

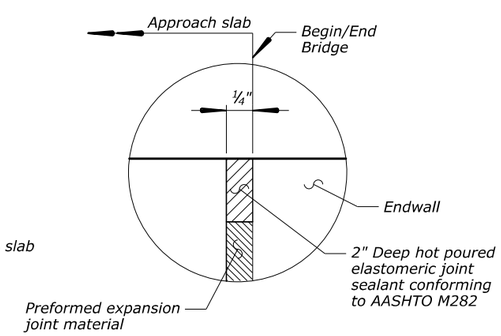

DETAIL B
No Scale

ESTIMATED QUANTITIES FOR ONE APPROACH SLAB

Slab Length	Slab Width	Concrete (Cu. Yd.)	Reinf. * Steel (Lbs.)	Joint Width
8'-0"	29'-0"	14	2080	1½"

* Does not include dowels

PRELIMINARY
NOT FOR CONSTRUCTION

Notes:

1. *See "GIRDER SECTIONS," "EXTERIOR GIRDER TOP FLANGE," and "BRIDGE RAILING" sheets for curb reinforcement details.*
2. *See "ABUTMENT LAYOUT" sheet for dowel reinforcement details.*

U.S. DEPARTMENT OF TRANSPORTATION
FEDERAL HIGHWAY ADMINISTRATION
WESTERN FEDERAL LANDS HIGHWAY DIVISION

OLYMPIC NATIONAL PARK

CANYON CREEK BRIDGE

APPROACH SLAB

NO.	DATE	BY	REVISIONS	NO.	DATE	BY	REVISIONS	DESIGNED BY	DRAWN BY	CHECKED BY	SCALE	PROJECT TEAM LEADER	BRIDGE DRAWING	DATE	DRAWING NO.
								AR	BSK		As Shown	George Choubah	18 of 18	March 2017	RG3106-R

70% PLAN IN HAND 04-18-2017

ACTUAL FILE: APPROACH SLAB.DGN

M:\PROJECTS_ACCESS\WA\WA_JEFF_91420(1)\Bridge\Microstation\Bridge Design Files\0_0PROJECTS.dgn

17-Mar-2017 10:52 AM

STATE	PROJECT	SHEET NUMBER
WA	JEFF 91420(1)	H.1

POLE PLANTING QUANTITIES

See sheet X.X

ITEM 62632-0000 PLANTINGS (POLE PLANTINGS)	FOR INFORMATION ONLY NOT MEASURED FOR PAYMENT	
	COTTONWOOD	WILLOW
(LMSM)	(EACH)	(EACH)
11+58.52 to 15+39.03	30	210
30+93.41 to 53+48.89	105	735
71+00 to 85+00	15	105
97+57.95 to 98+46.74	5	35
HABITAT MITIGATION - CHANNEL PRESERVATION	240	3,600
SPRUCE CREEK	20	140
ALL	**415**	**4,825**

BANK STABILIZATION (WOOD BUFFER w/ DOLOSSE) QUANTITIES

See sheets H.X-X

LOCATION	ITEM 64703-8000 MITIGATION, BANK STABILIZATION (WOOD BUFFER w/ DOLOSSE)	FOR INFORMATION ONLY - NOT MEASURED FOR PAYMENT [1]					ITEM 64704-1700 MITIGATION, BANK STABILIZATION (COARSE WOODY DEBRIS)
		CONSERVED STREAM BANK MATERIAL	DEFLECTOR-LOG BUNDLES WITH DOLOS	DEFLECTOR ROOTWAD	CHAIN, 1/2" HDG GRADE 30	ADDITIONAL DEFLECTOR-LOG BUNDLES WITH DOLOS [2]	
	(EACH)	(CUYD)	(EACH)	(EACH)	(LNFT)	(EACH)	(CUYD)
11+58.52 to 15+39.03	6	1,200	150	84	6,000	24	1,800
30+93.41 to 53+48.89	21	4,200	525	294	21,000	84	6,300
71+00 to 85+00	3	600	75	42	3,000	12	900
97+57.95 to 98+46.74	1	200	25	14	1,000	4	300
SPRUCE CREEK	4	800	100	56	4,000	16	1,200
TOTAL	**35**	**7,000**	**875**	**490**	**35,000**	**140**	**10,500**

BANK STABILIZATION DIVERSION QUANTITIES

LOCATION	ITEM 65001-1000 CONSTRUCT AND MAINTAIN DIVERSION (FLOW DIVERSION)
	(LMSM)
11+58.52 to 15+39.03	**ALL**
30+93.41 to 53+48.89	
71+00 to 85+00	
97+57.95 to 98+46.74	
HABITAT MITIGATION - CHANNEL PRESERVATION	
SPRUCE CREEK	

BANK STABILIZATION HABITAT MITIGATION - CHANNEL PRESERVATION

See sheets H.X-X

ITEM 64703-8000 MITIGATION, BANK STABILIZATION (CHANNEL PLUG)	FOR INFORMATION ONLY - NOT MEASURED FOR PAYMENT [3]					ITEM 64704-1700 MITIGATION, BANK STABILIZATION (COARSE WOODY DEBRIS)
	CONSERVED STREAM BANK MATERIAL	RIPRAP, CLASS 5	DEFLECTOR-LOG BUNDLES	DEFLECTOR ROOTWAD	CHAIN, 1/2" HDG GRADE 30	
(EACH)	(CUYD)	(CUYD)	(EACH)	(EACH)	(LNFT)	(CUYD)
24	480	2,880	168	120	3,360	2,880

FOOTNOTE:

[1] Subsidiary to the 64703-8000 MITIGATION, BANK STABILIZATION (WOOD BUFFER w/ DOLOS) pay item.

[2] Provide additional deflector log bundles with dolos as needed. Quantity assumes 4 deflector log bundles with dolos per Mitigation Bank Stabilization (Wood Buffer w/ Dolosse) unit.

[3] Subsidiary to the 64703-8000 MITIGATION, BANK STABILIZATION (CHANNEL PLUG) pay item.

TABULATION OF BANK STABILIZATION AND HABITAT MITIGATION QUANTITIES

--/---
Designed by: C. Conrad 05/2017 Checked by:
25 May 2017 10:16 AM c:\myfiles\pw_production\d0290746\wa-a2013020-Tabulation.dgn [US_Sur_ft2D]

MP 4.0 AOP CULVERT QUANTITIES

See sheets H.14-18

ITEM 15702-1000 TEMPORARY DIVERSION CHANNEL	*ITEM 20701-0300 SEPARATION-TABILIZATION GEOTEXTILE, CLASS 1, TYPE C*	*ITEM 20810-0000 SHORING AND BRACING*	*ITEM 25101-0300 PLACED RIPRAP, METHOD A, CLASS 3*	*ITEM 60220-0000 PRECAST REINFORCED CONCRETE BOX CULVERT (16-Ft SPAN X 16 FT RISE)*	*ITEM 64703-6000 MITIGATION, FISH PASSAGE BOULDER*	*ITEM 64704-1000 MITIGATION, BANK STABILIZATION, STREAMBED MATERIAL*
(LPSM)	*(SQYD)*	*(LPSM)*	*(CUYD)*	*(LNFT)*	*(EACH)*	*(CUYD)*
ALL	*100*	*ALL*	*100*	*40*	*-*	*-*

TABULATION OF MP 4.0 AOP CULVERT QUANTITIES

--/---
Checked by:
--/---
Designed by:
25 May 2017 8:30 AM
c:\myfiles\pw_production\d0290746\wa-a2013020-Tabulation4.dgn [US_Sur_ft2D]

STATE	PROJECT	SHEET NUMBER
WA	JEFF 91420(1)	H.3

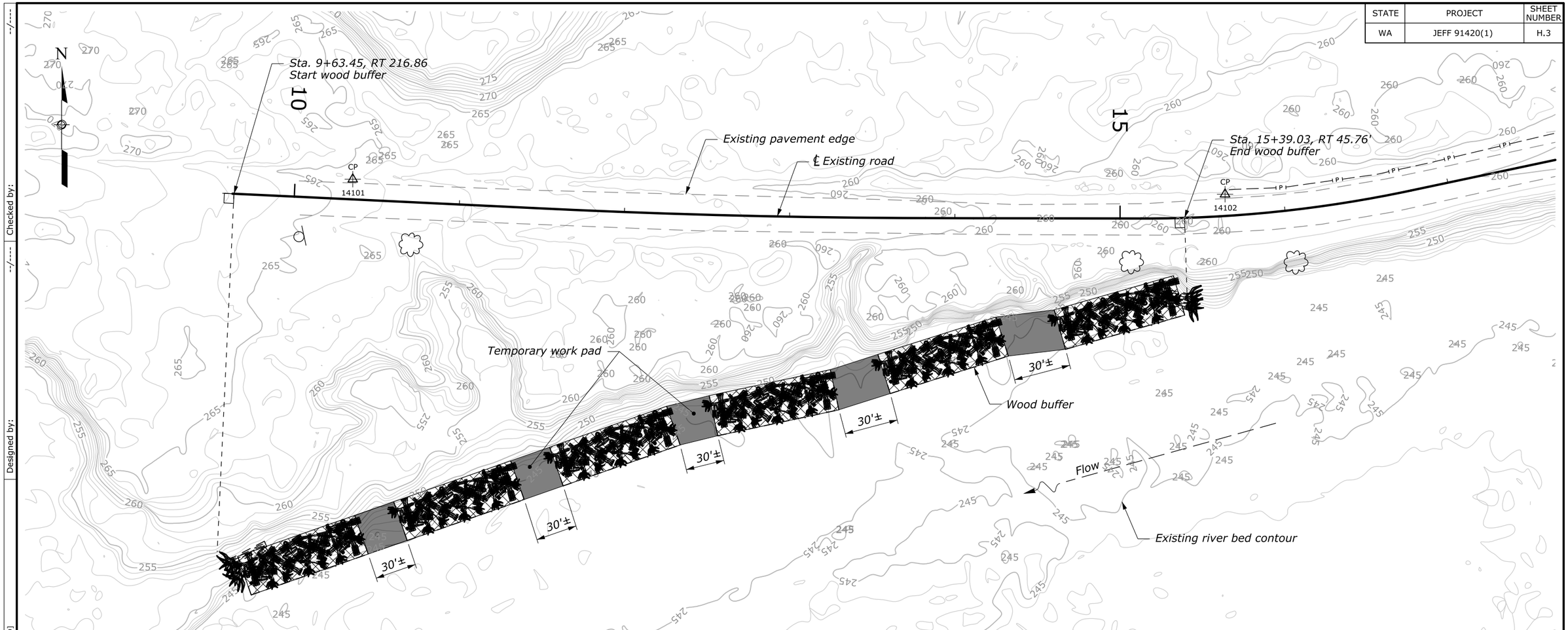

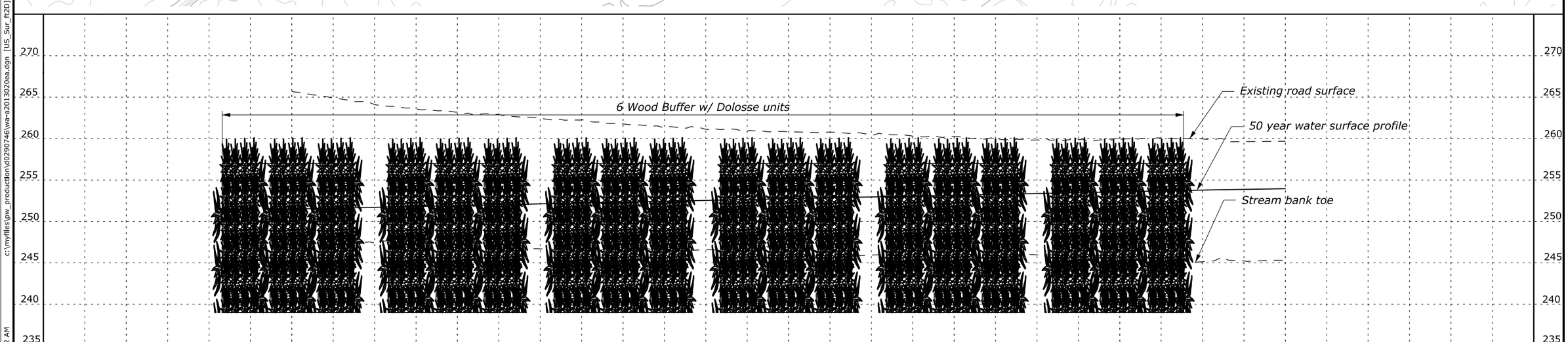

Designed by: --/---
Checked by: --/---
c:\myfiles\pw_production\d0290746\wa-a2013020ea.dgn [US_Sur_ft2D]
30 May 2017 8:02 AM

STATE	PROJECT	SHEET NUMBER
WA	JEFF 91420(1)	H.4

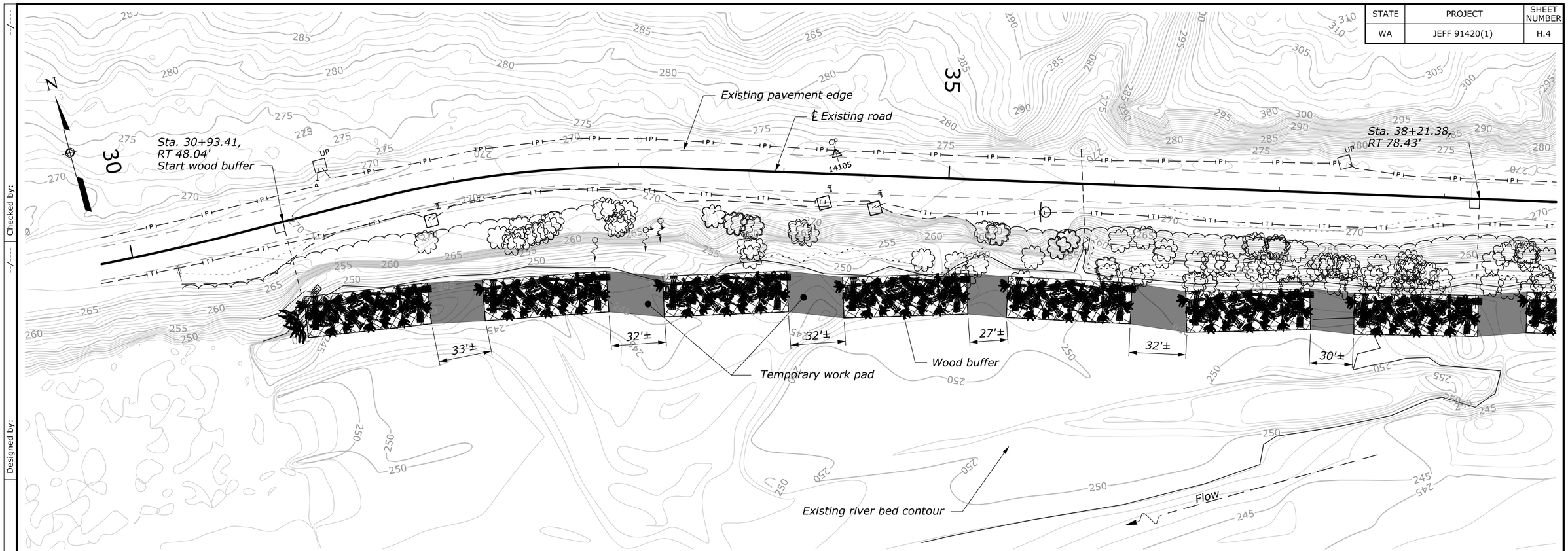

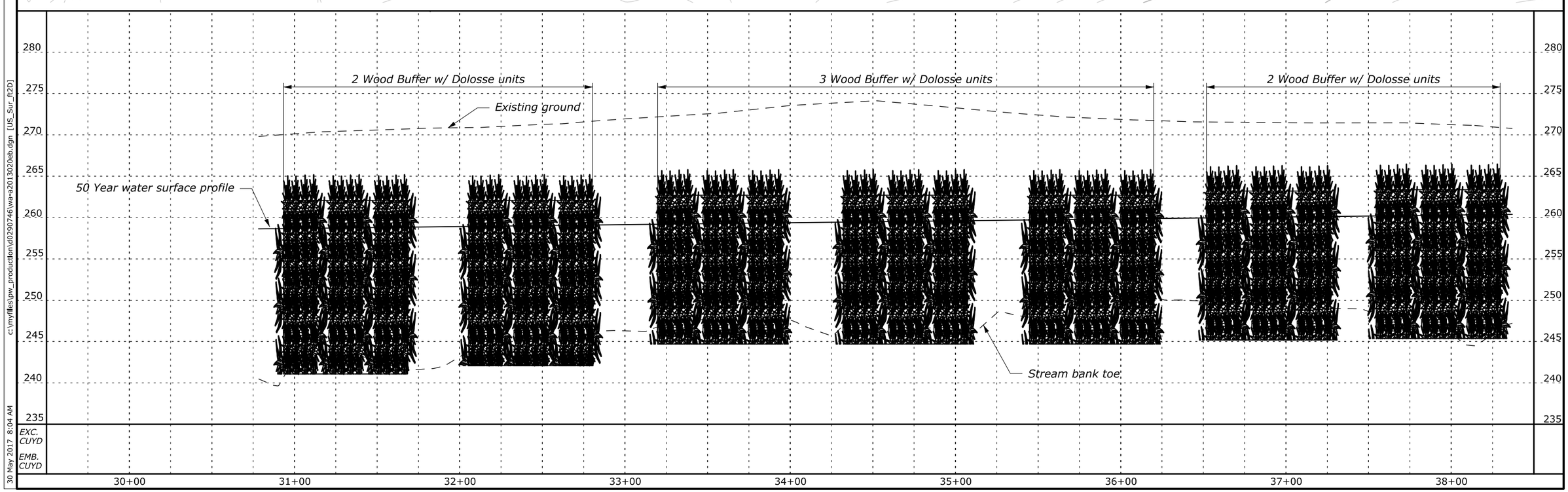

Designed by: --/---- Checked by: --/----

c:\myfiles\pw_production\d0290746\wa-a20130206b.dgn [US_Sur_ft2D]

30 May 2017 8:04 AM

STATE	PROJECT	SHEET NUMBER
WA	JEFF 91420(1)	H.5

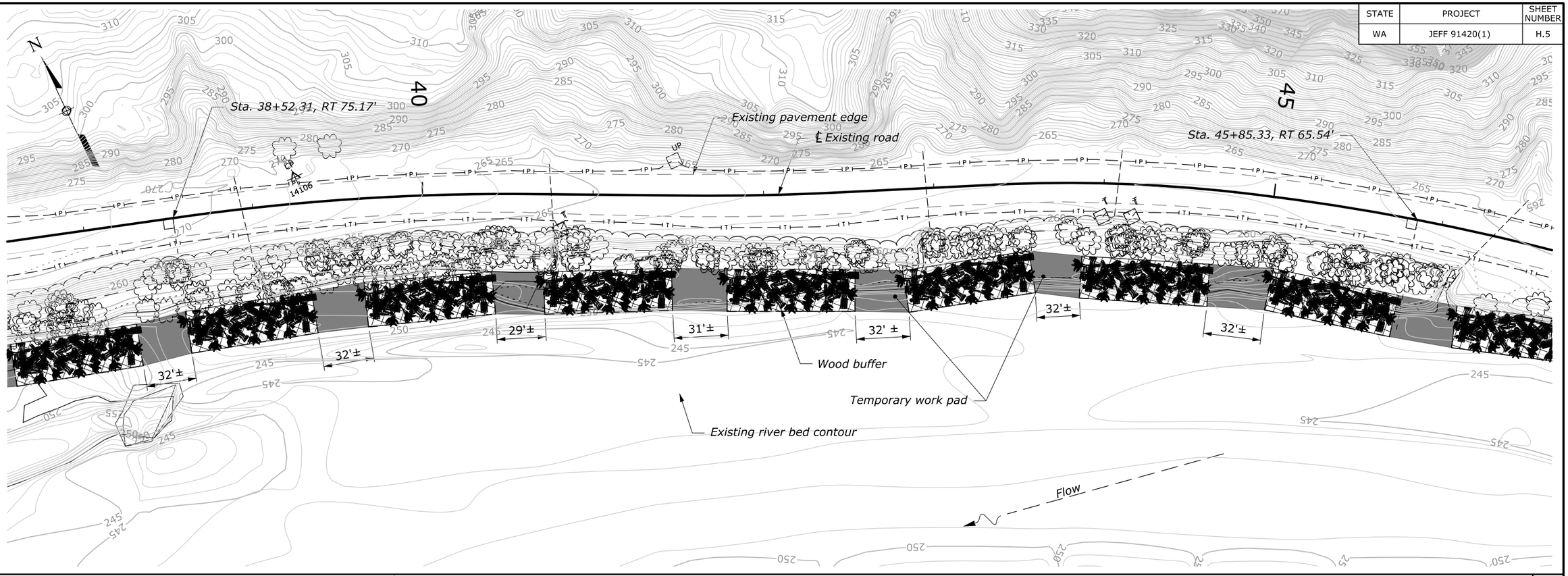

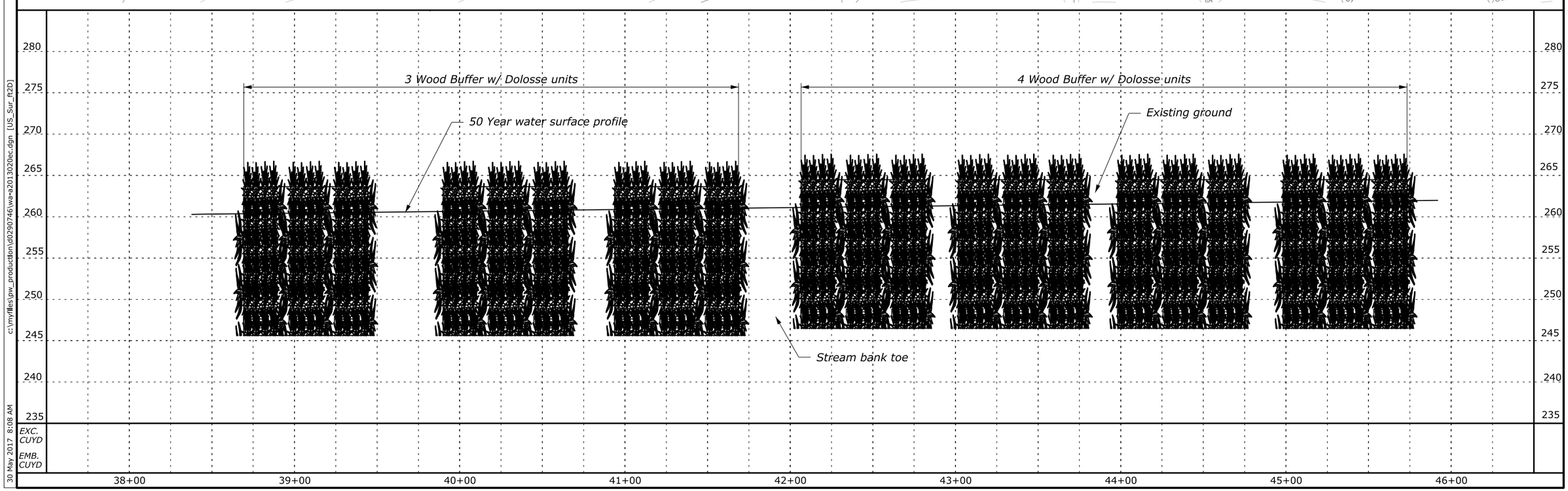

Designed by: --/---
Checked by: --/---
c:\myfiles\pw_production\d0290746\wa-a2013020ec.dgn [US_Sur_ft2D]
30 May 2017 8:08 AM

STATE	PROJECT	SHEET NUMBER
WA	JEFF 91420(1)	H.6

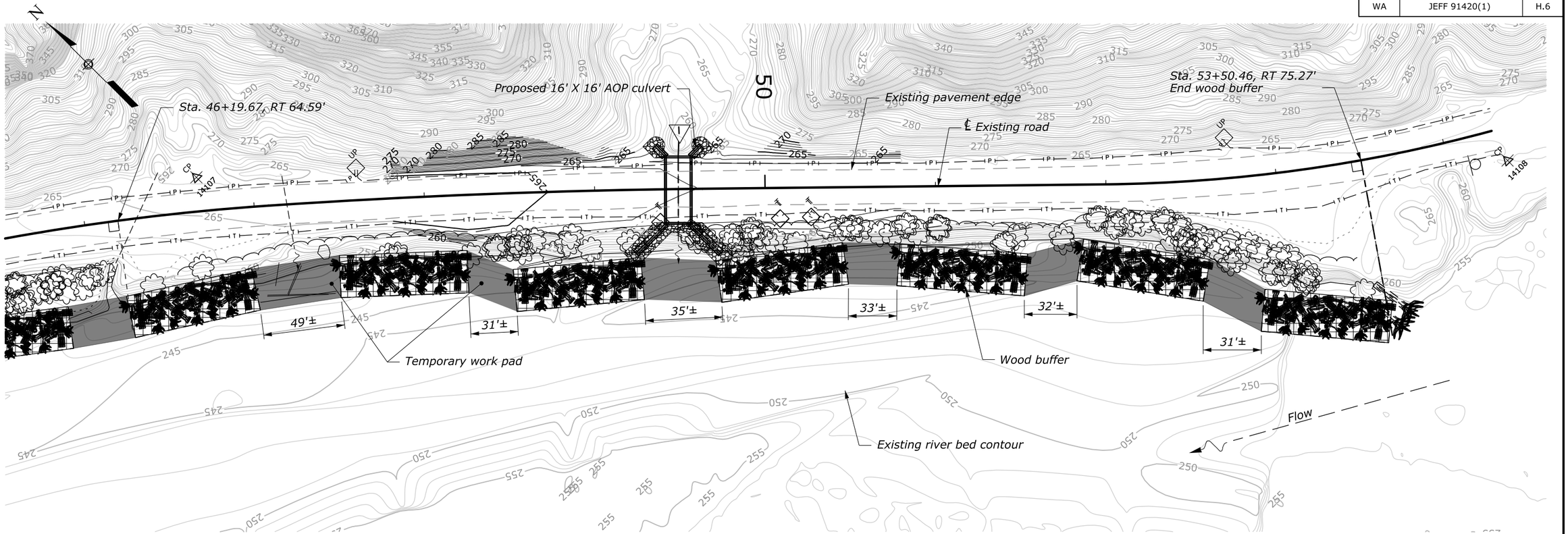

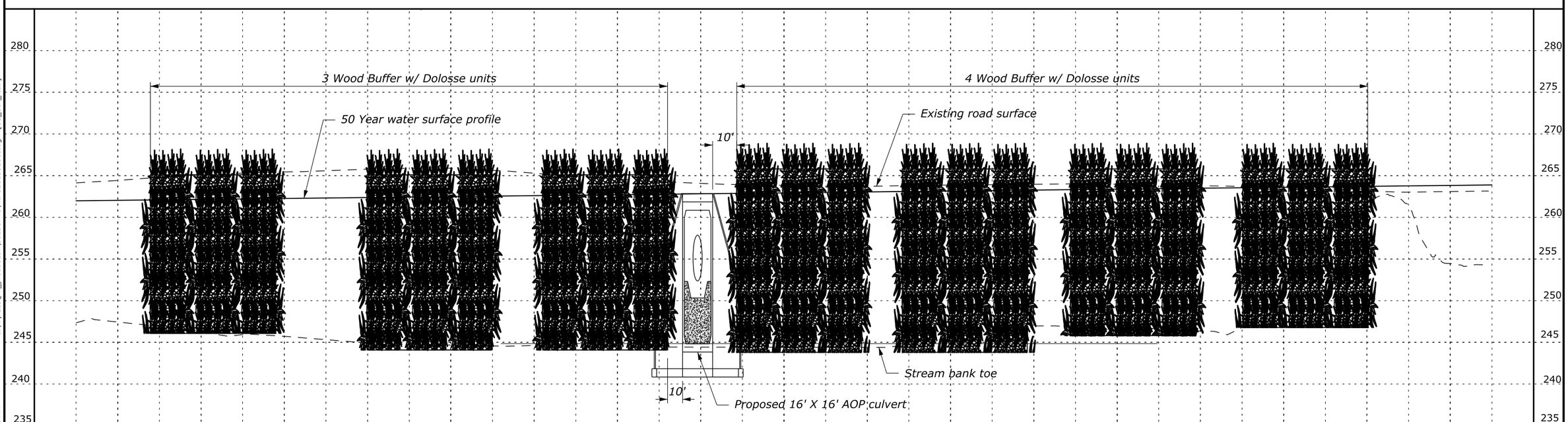

EXC. CUYD

EMB. CUYD

Designed by: --/---- Checked by: --/----

c:\myfiles\pw_production\d0290746\wa=a2013020ed.dgn [US_Sur_ft2D]

30 May 2017 8:30 AM

STATE	PROJECT	SHEET NUMBER
WA	JEFF 91420(1)	H.7

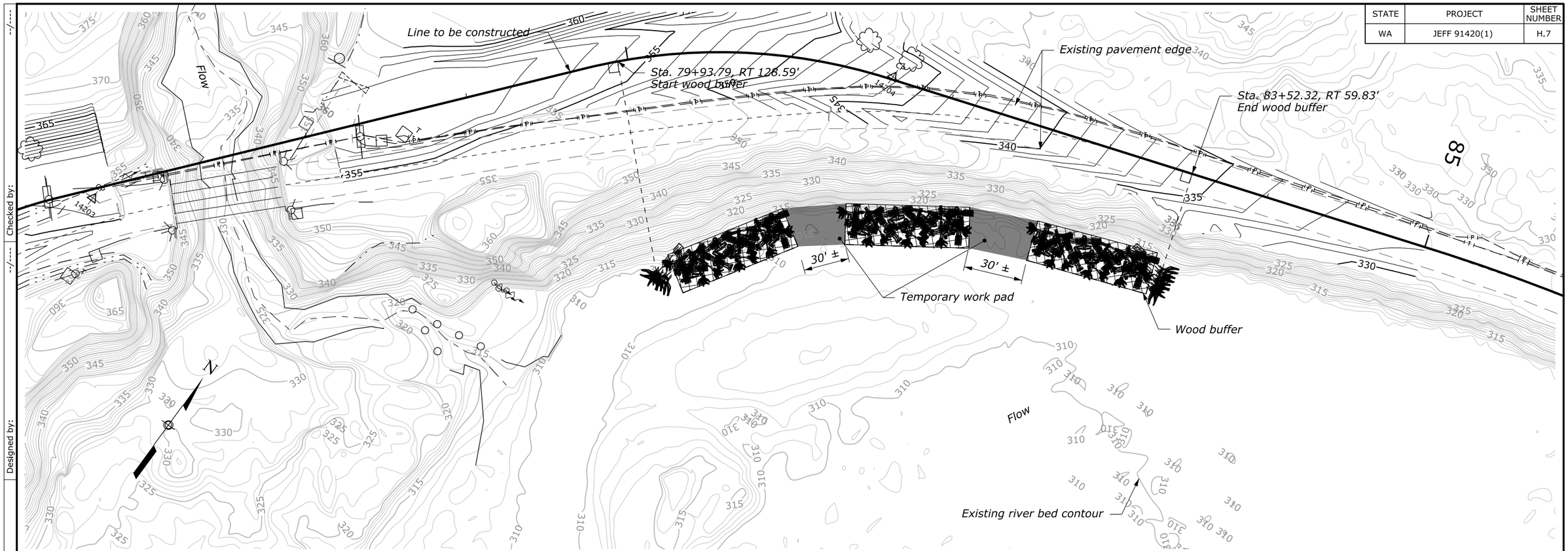

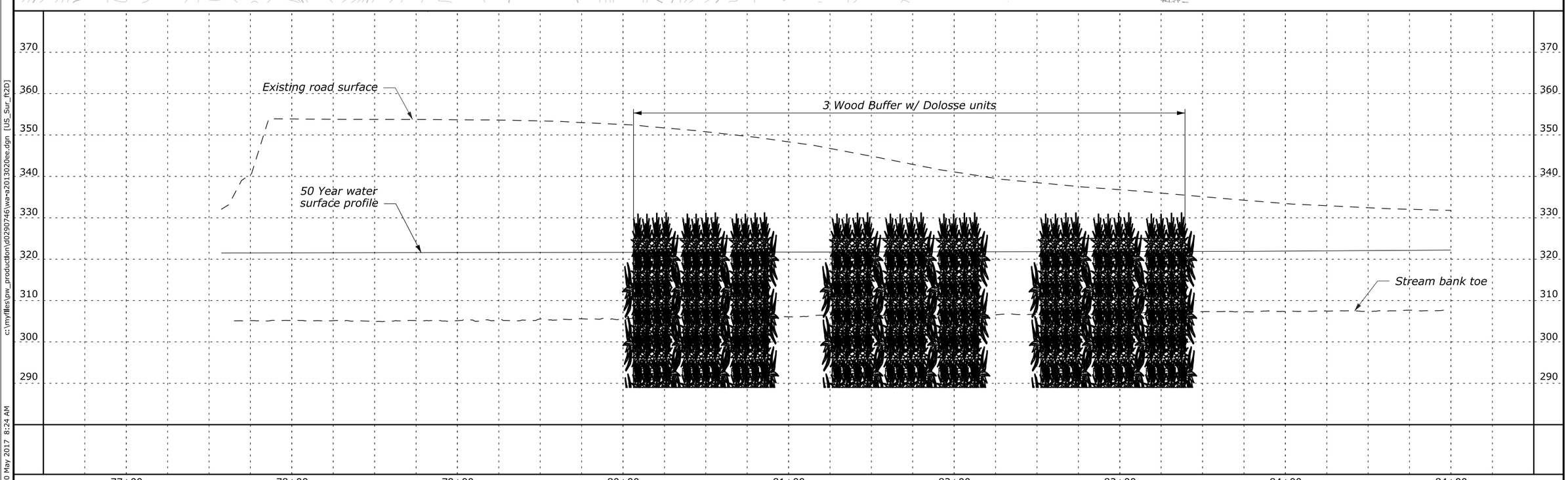

Designed by:
Checked by:
--/---
--/---
c:\myfiles\pw_production\d0290746\wa-a2013020ee.dgn [US_Sur_ft2D]
30 May 2017 8:24 AM

STATE	PROJECT	SHEET NUMBER
WA	JEFF 91420(1)	H.8

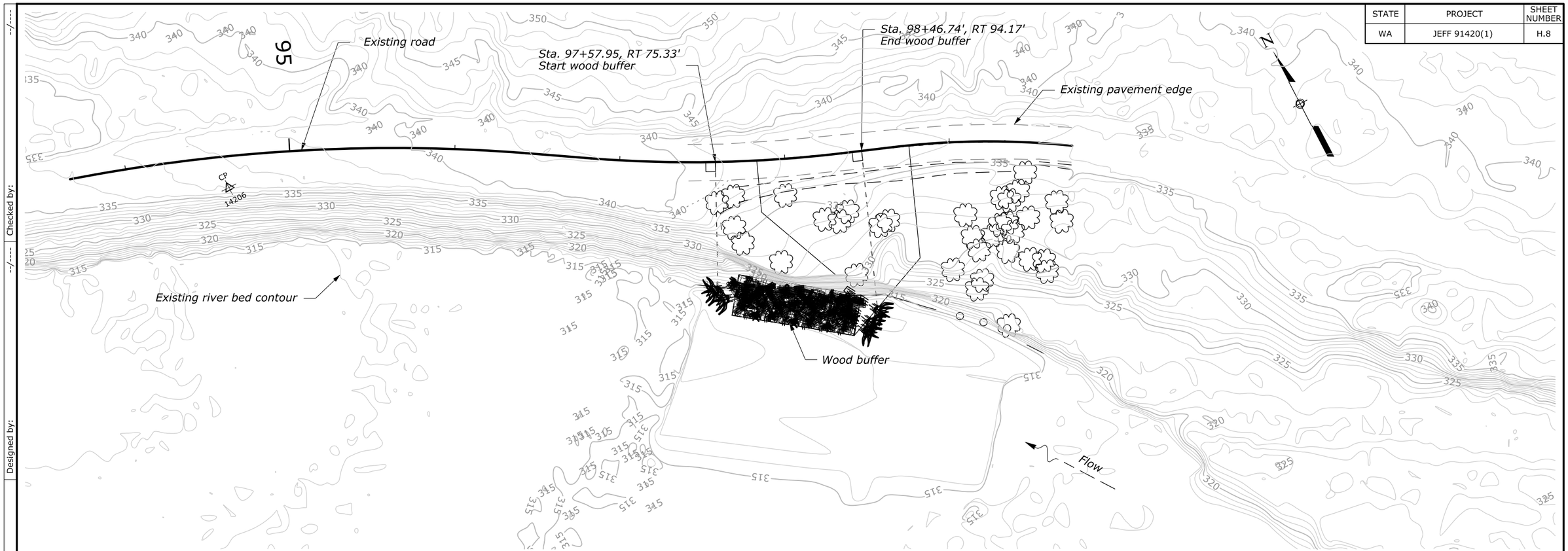

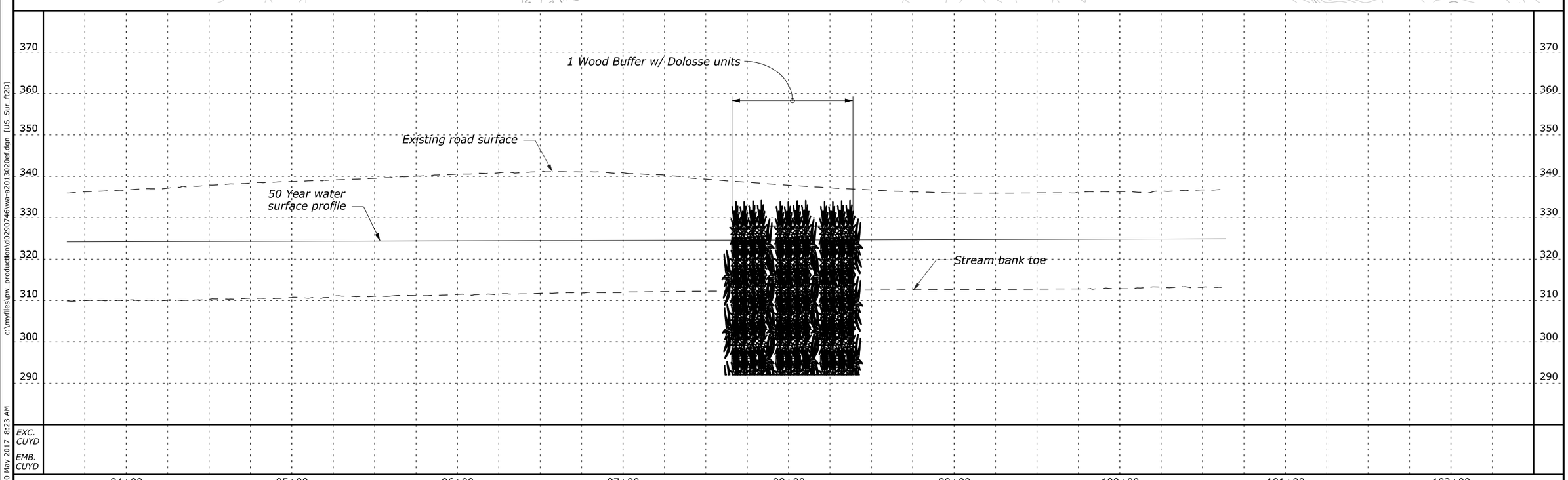

Designed by:
Checked by:
--/---
--/---
c:\myfiles\pw_production\d0290746\wa-a20130206f.dgn [US_Sur_ft2D]
30 May 2017 8:23 AM

STATE	PROJECT	SHEET NUMBER
WA	JEFF 91420(1)	H.9

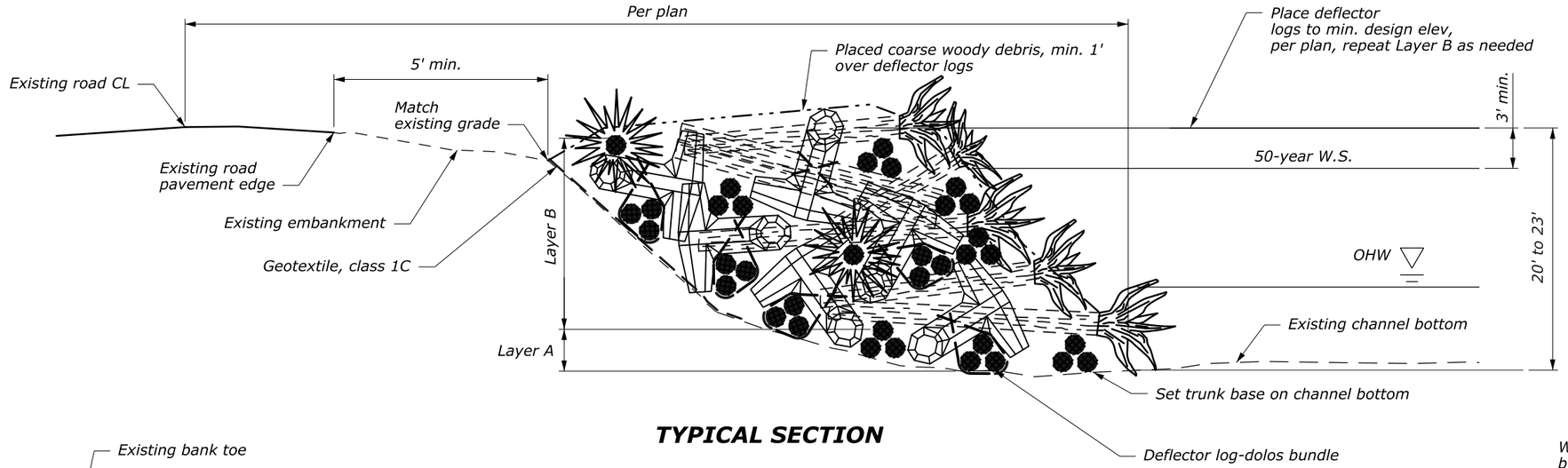

TYPICAL SECTION

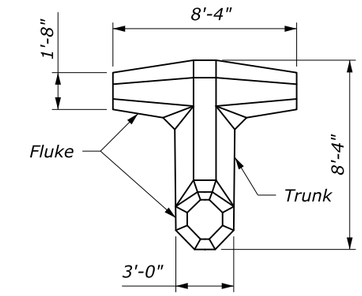

DOLOS DETAIL

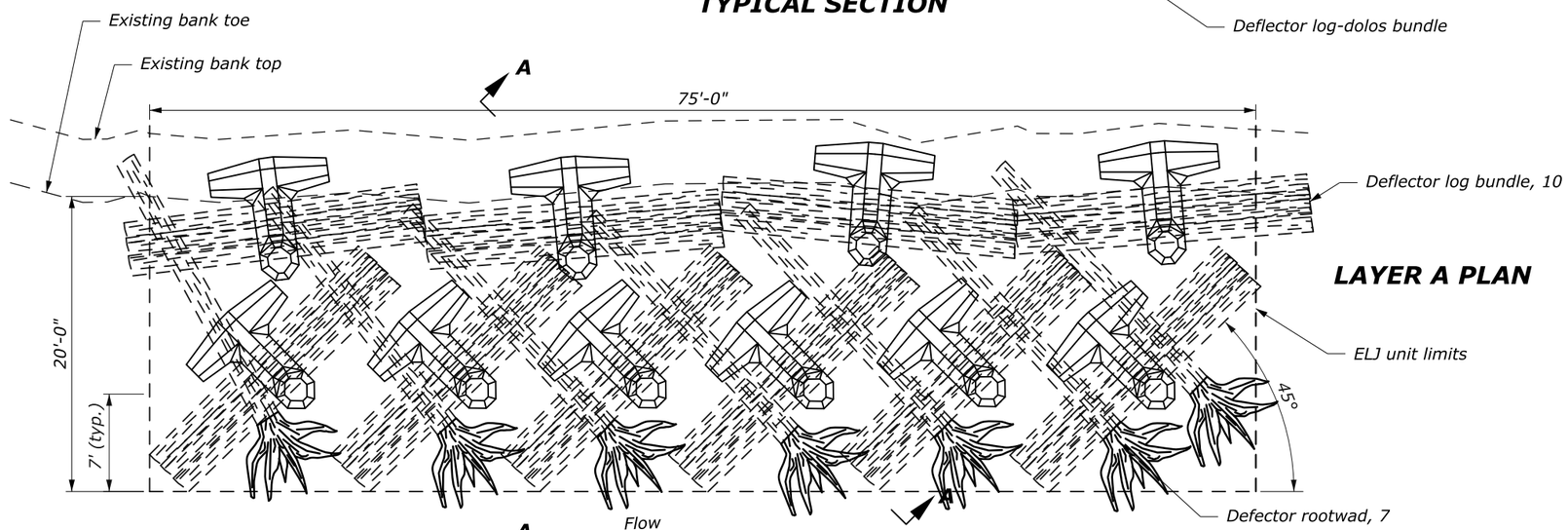

LAYER A PLAN

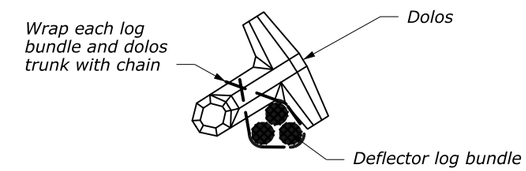

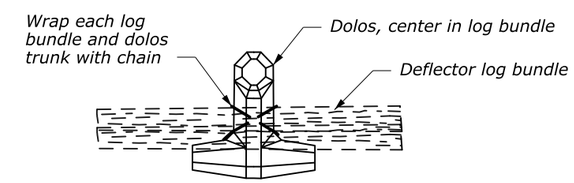

TYPICAL DEFLECTOR LOG-DOLOS BUNDLE DETAIL

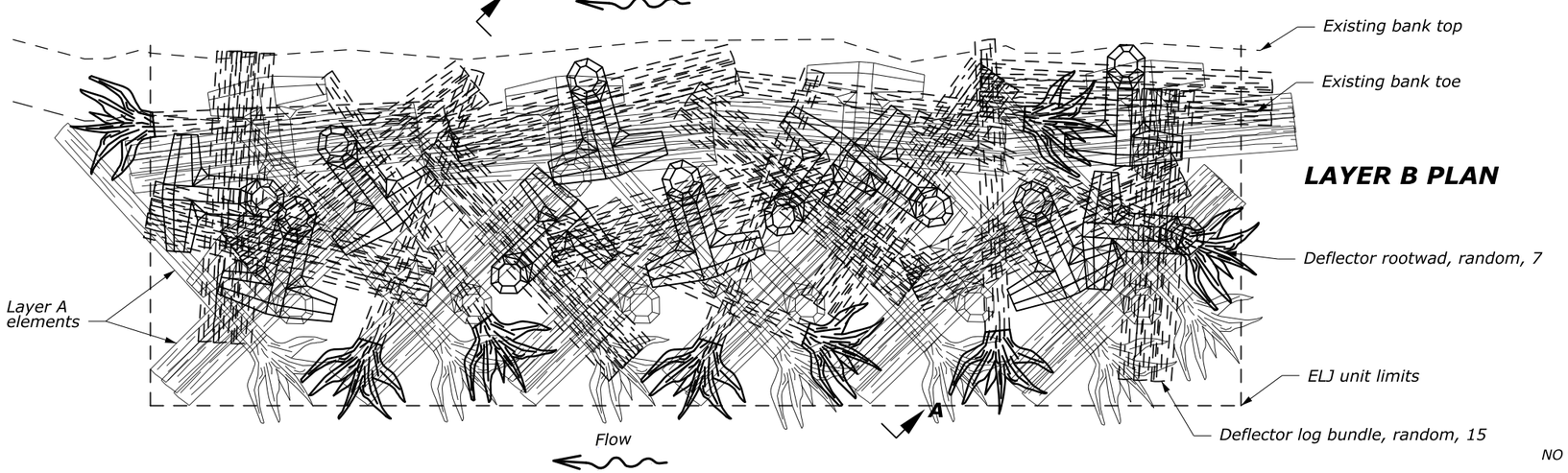

LAYER B PLAN

Notes:

1. Deflector log; 20 to 22 feet trunk, 18 to 37-inch diameter without attached rootwad.
2. Deflector rootwad; 20 to 22 feet trunk, 18 to 37-inch diameter with attached rootwad.
3. Deflector log bundle; 110 to 150 ft3 total log volume, 16,000 lbs dolos weight.
4. Coarse woody debris; even mixture of branches, limbs, trunks, vegetation, 1-inch to 8-inch diameter, tightly pack into void space between fill logs and deflector logs.
5. Layer B; 15 randomly placed deflector log-dolos bundles and 6 defector rootwads.
6. Excavate and conserve streambed material as needed for setting wood buffer bottom within 1 foot of nearest water surface elevation.

NO SCALE

BANK STABILIZATION WOOD BUFFER w/ DOLOSSE DETAILS

Designed by: --/--- Checked by: --/---

25 May 2017 2:25 PM c:\myfiles\pw_production\d0290746\wa-a20130206g.dgn [US_Sur_ft2D]

STATE	PROJECT	SHEET NUMBER
WA	JEFF 91420(1)	H.10

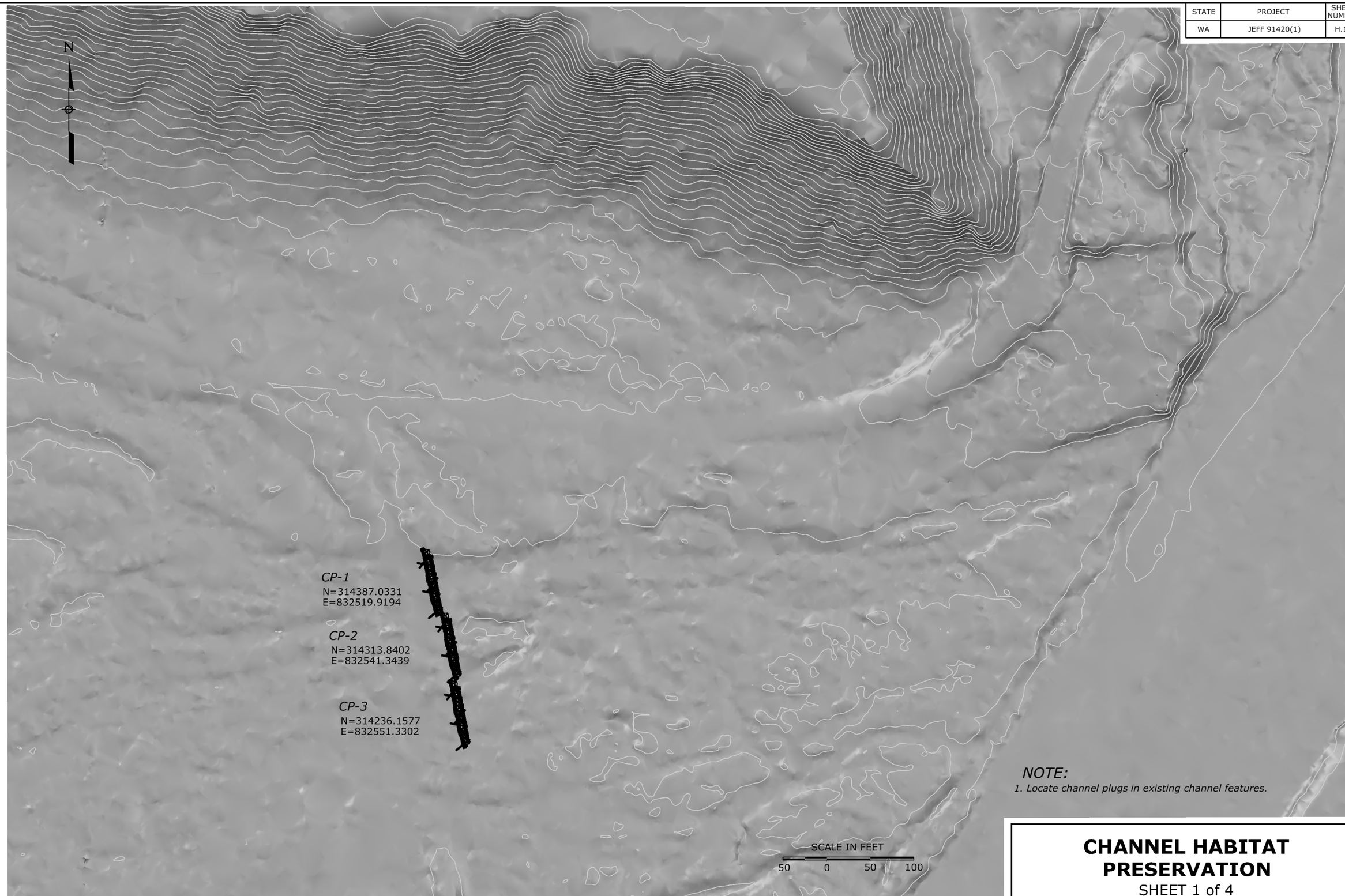

NOTE:

1. Locate channel plugs in existing channel features.

CHANNEL HABITAT PRESERVATION

SHEET 1 of 4

--/---
Checked by:
--/---
Designed by:
c:\myfiles\pw_production\d0290746\wa-a2013020eh.dgn [US_Sur_ft2D]
17 April 2017 3:33 PM

STATE	PROJECT	SHEET NUMBER
WA	JEFF 91420(1)	H.11

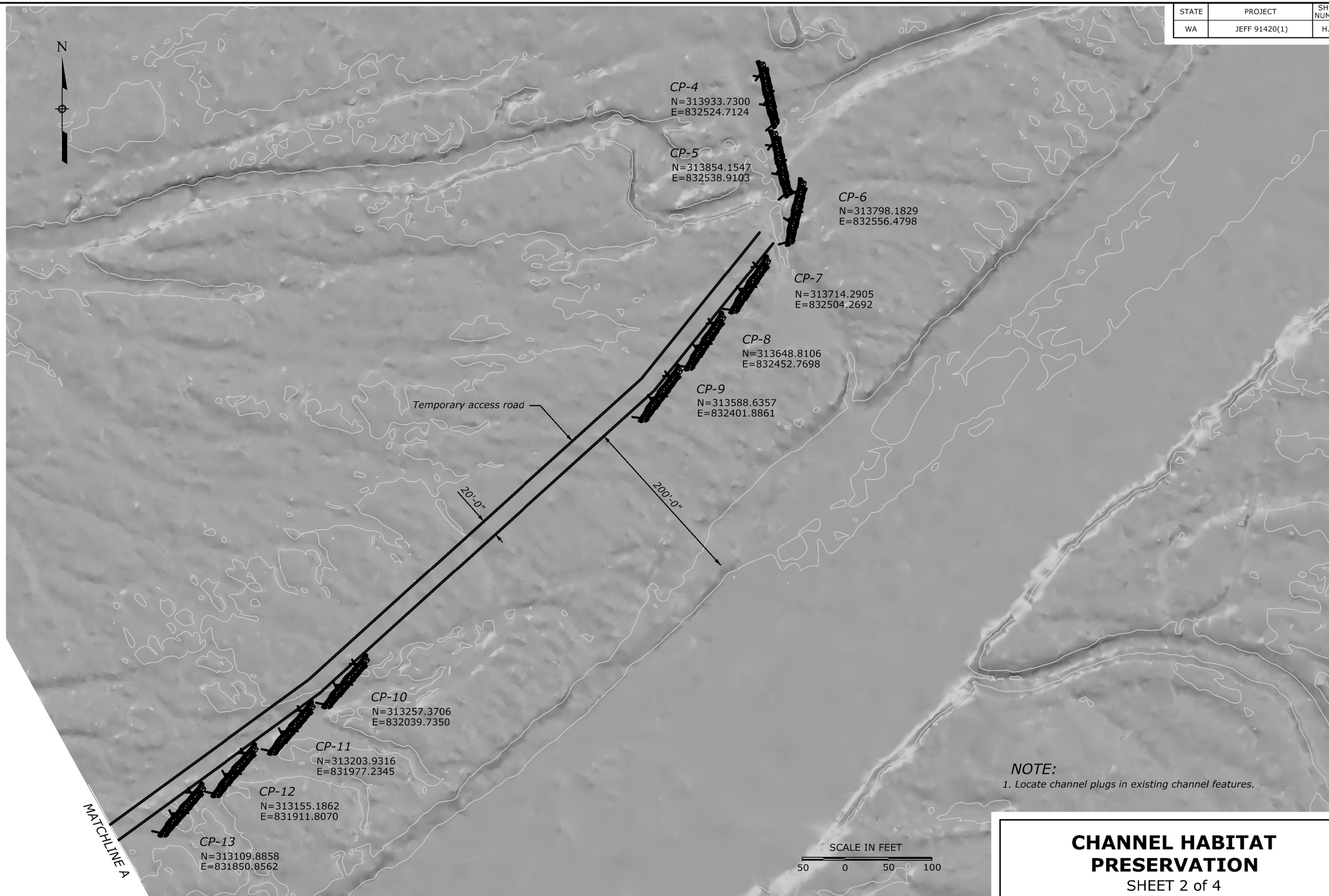

NOTE:

1. Locate channel plugs in existing channel features.

CHANNEL HABITAT PRESERVATION

SHEET 2 of 4

--/---
Checked by:
--/---
Designed by:
c:\myfiles\pw_production\d0290746\wa-a20130208h-2.dgn [US_Sur_ft2D]
30 May 2017 9:16 AM

STATE	PROJECT	SHEET NUMBER
WA	JEFF 91420(1)	H.12

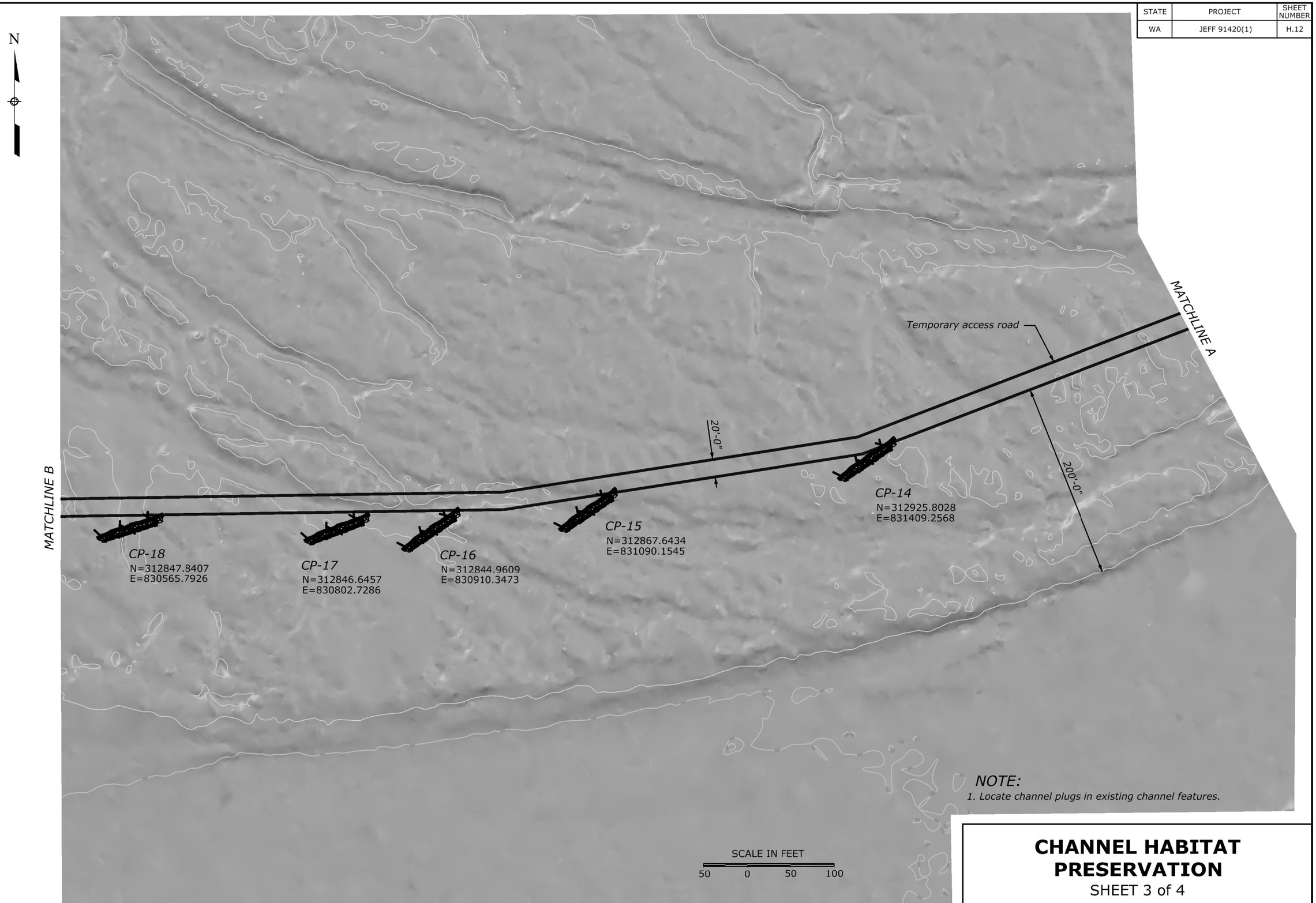

NOTE:

1. Locate channel plugs in existing channel features.

CHANNEL HABITAT PRESERVATION

SHEET 3 of 4

Designed by: --/---
Checked by: --/---
c:\myfiles\pw_production\d0290746\wa-a2013020eh-3.dgn [US_Sur_ft2D]
30 May 2017 9:22 AM

STATE	PROJECT	SHEET NUMBER
WA	JEFF 91420(1)	H.13

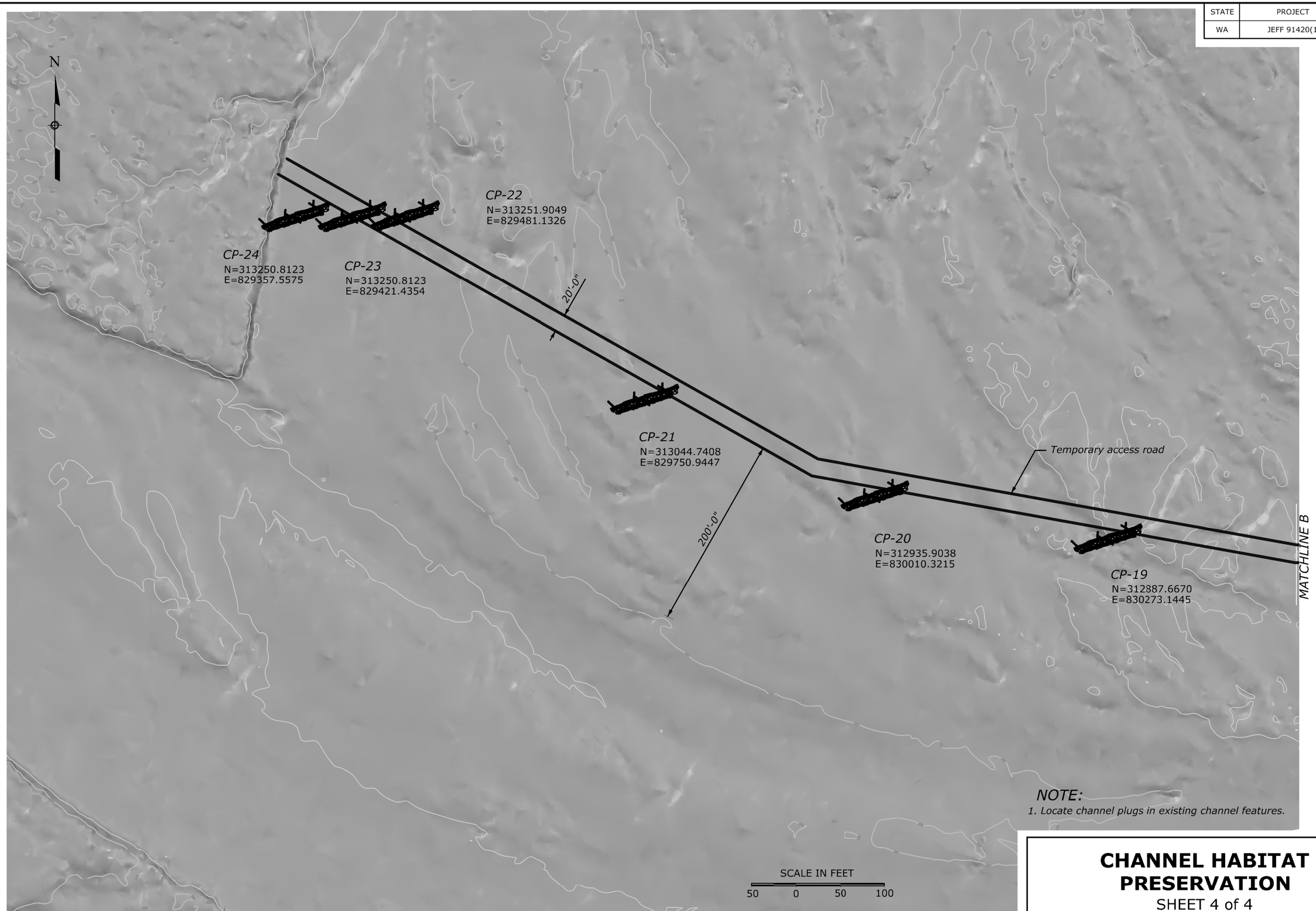

NOTE:
1. Locate channel plugs in existing channel features.

CHANNEL HABITAT PRESERVATION

SHEET 4 of 4

30 May 2017 9:29 AM c:\myfiles\pw_production\d0290746\wa-a2013020eh-4.dgn [US_Sur_ft2D] Designed by: --/--- Checked by: --/---

STATE	PROJECT	SHEET NUMBER
WA	JEFF 91420(1)	H.14

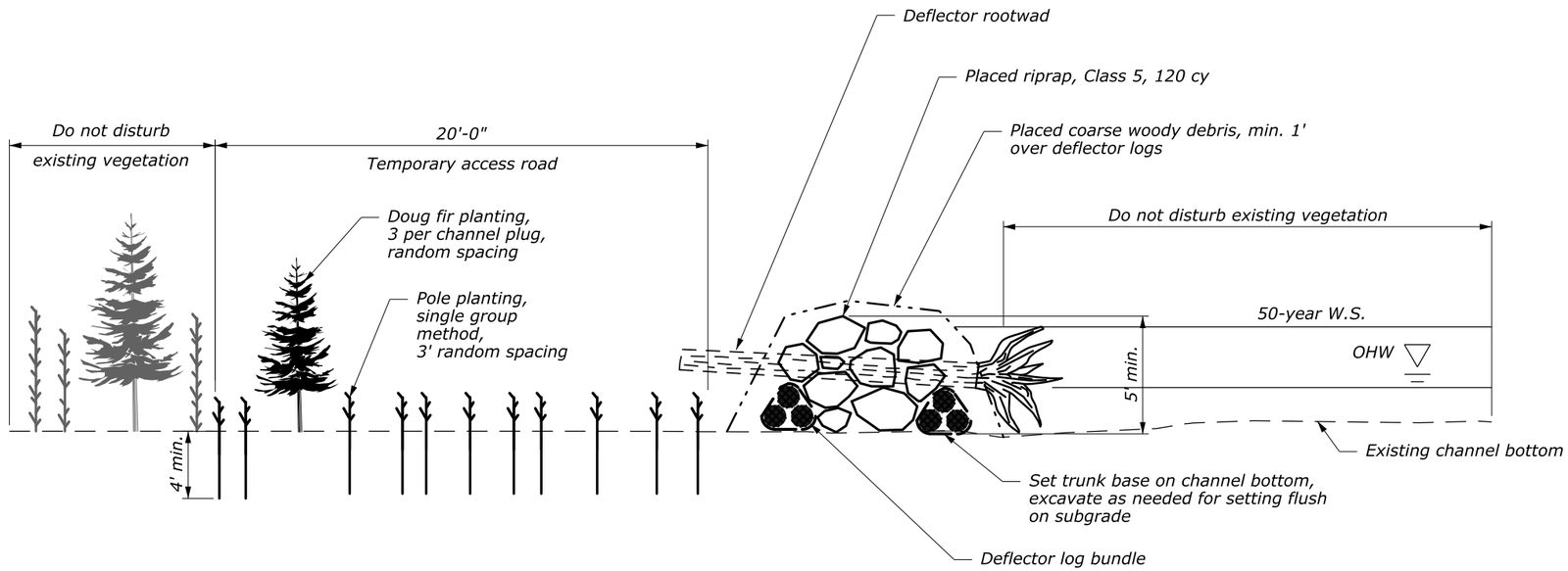

TYPICAL SECTION

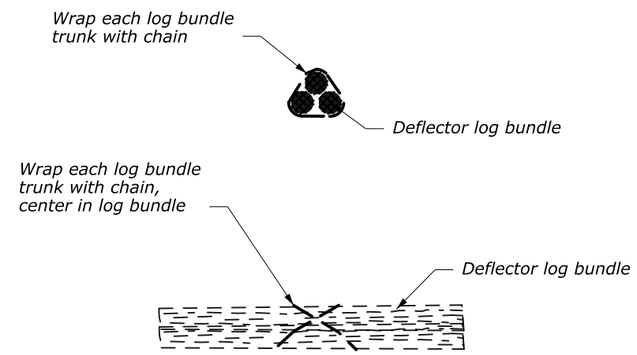

TYPICAL DEFLECTOR LOG BUNDLE DETAIL

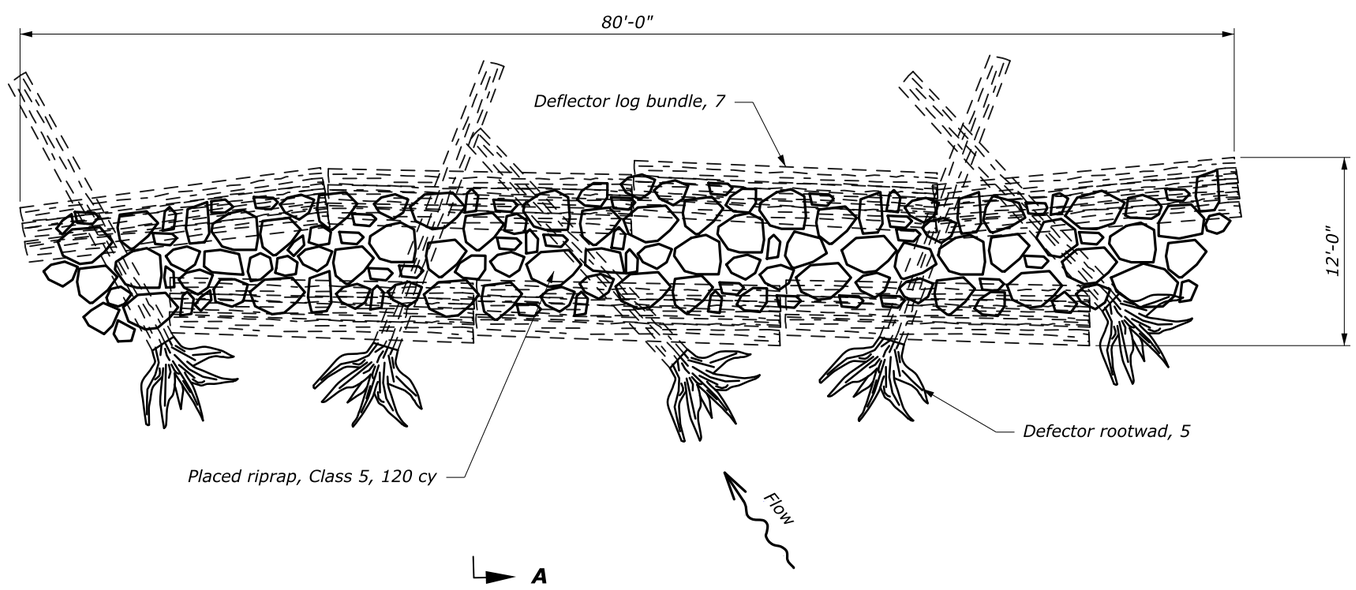

PLAN

NOTE:

1. Deflector log; 20 to 22-foot trunk, 18 to 37-inch diameter without attached rootwad.
2. Deflector rootwad; 20-foot min. trunk, 18 to 37-inch diameter with attached rootwad.
3. Deflector log bundle; 110 to 150 ft3 total log volume.
4. Coarse woody debris; even mixture of branches, limbs, trunks, vegetation, 1-inch to 8-inch diameter, tightly pack into void space between fill logs and deflector logs.

NO SCALE

CHANNEL PLUG DETAILS

Designed by: --/---
Checked by: --/---
30 May 2017 8:58 AM c:\myfiles\pw_production\d0290746\wa-a2013020eh-5.dgn [US_Sur_ft2D]

STATE	PROJECT	SHEET NUMBER
WA	JEFF 91420(1)	H.15

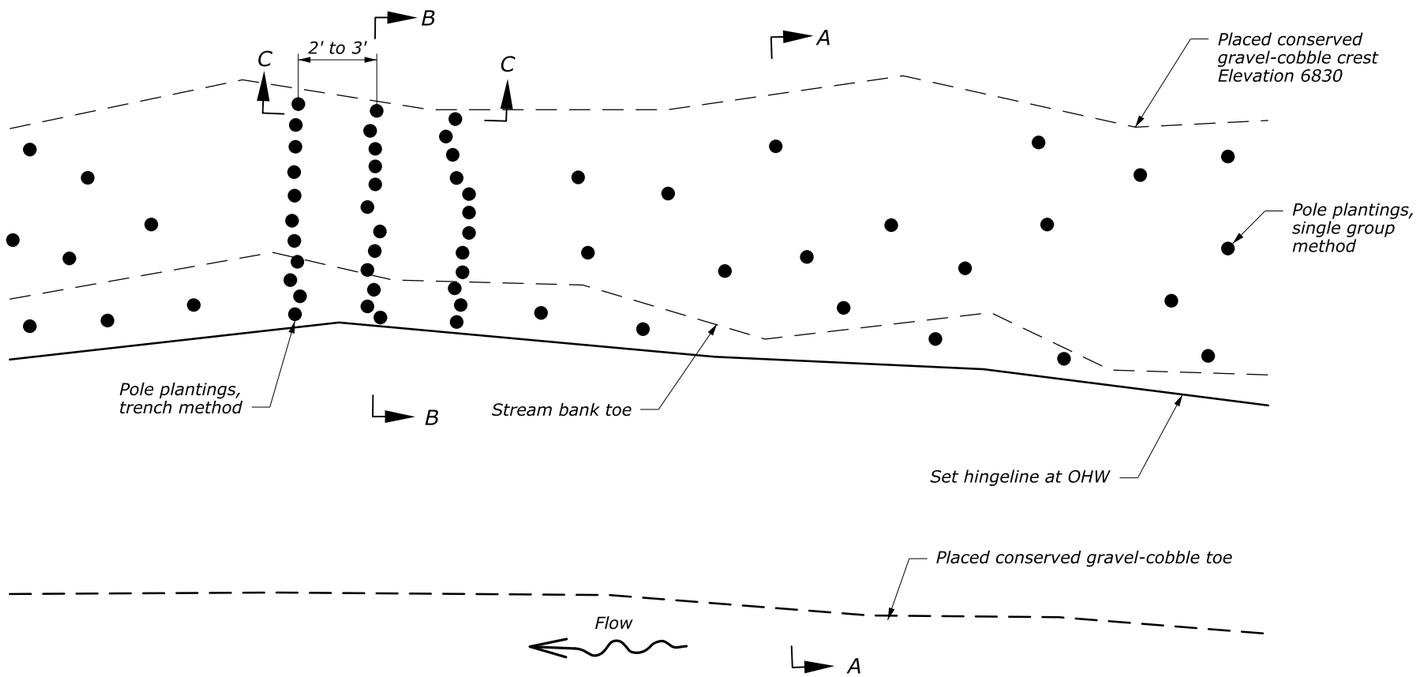

PLAN

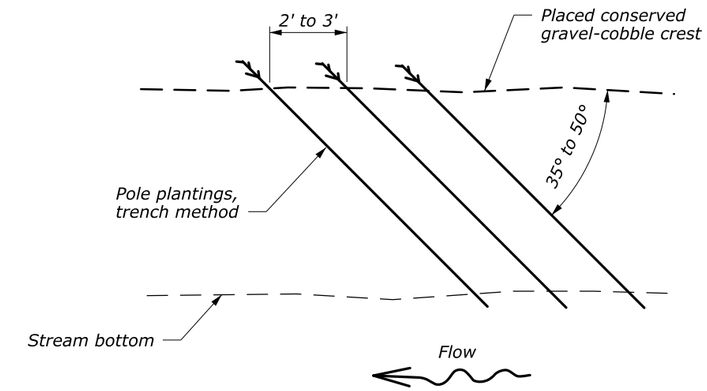

SECTION C

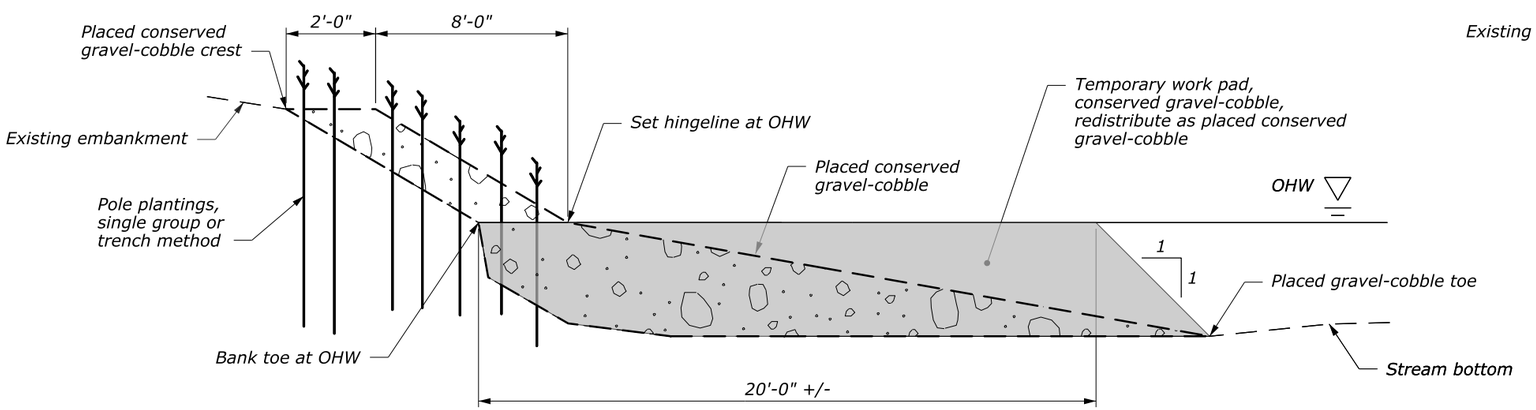

SECTION A

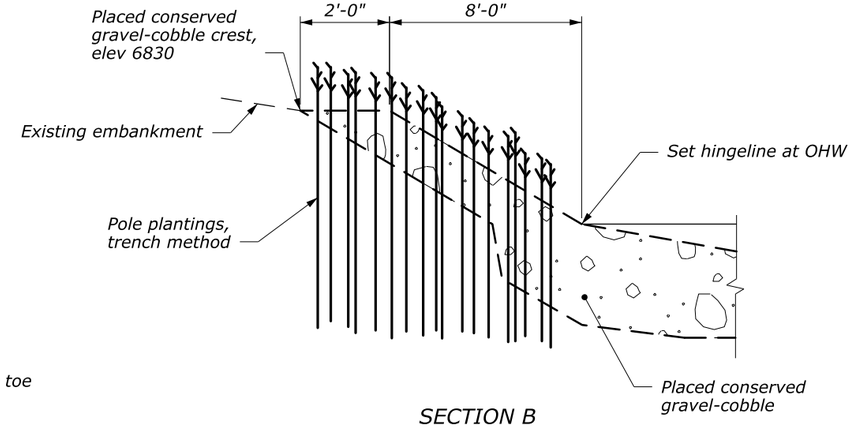

SECTION B

NOTE:

1. Do not disturb existing trees when placing conserved streamed material.
2. Do not excavate existing stream bank or bottom when placing conserved streambed material.

NO SCALE

GRAVEL-COBBLE BANK STABILIZATION TYPICAL SECTIONS

--/--- Checked by: --/--- Designed by: c:\myfiles\pw_production\d0290746\wa=a2013020ep.dgn [US_Sur_ft2D] 30 May 2017 11:00 AM

STATE	PROJECT	SHEET NUMBER
WA	JEFF 91420(1)	H.14

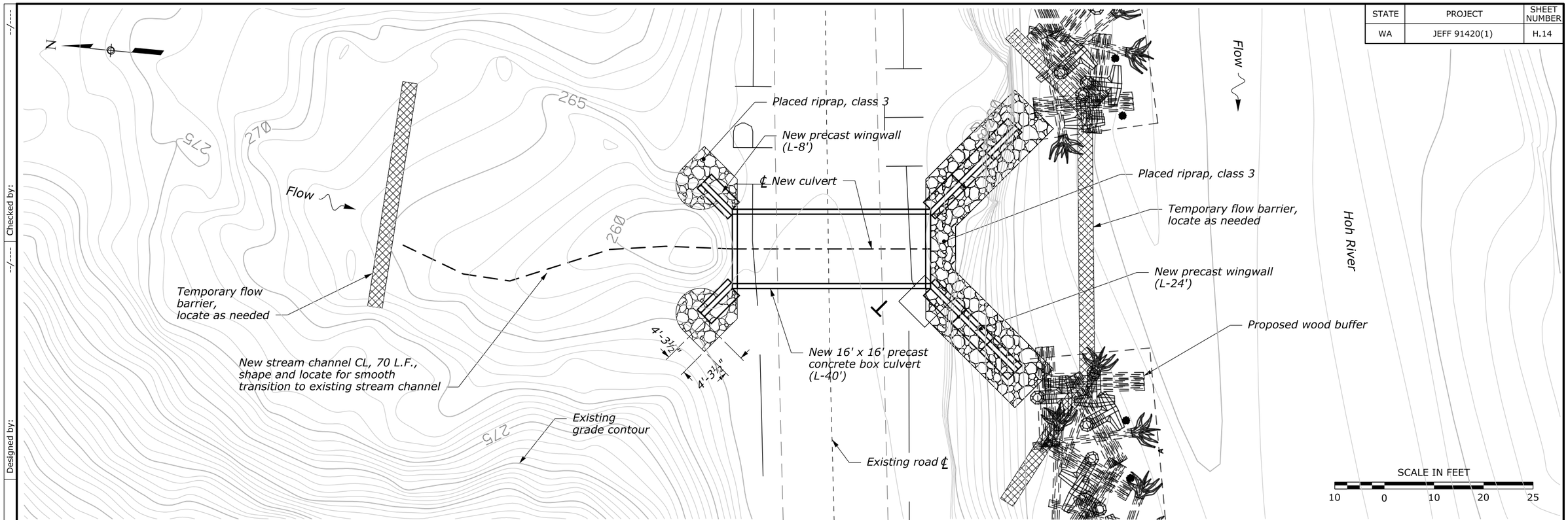

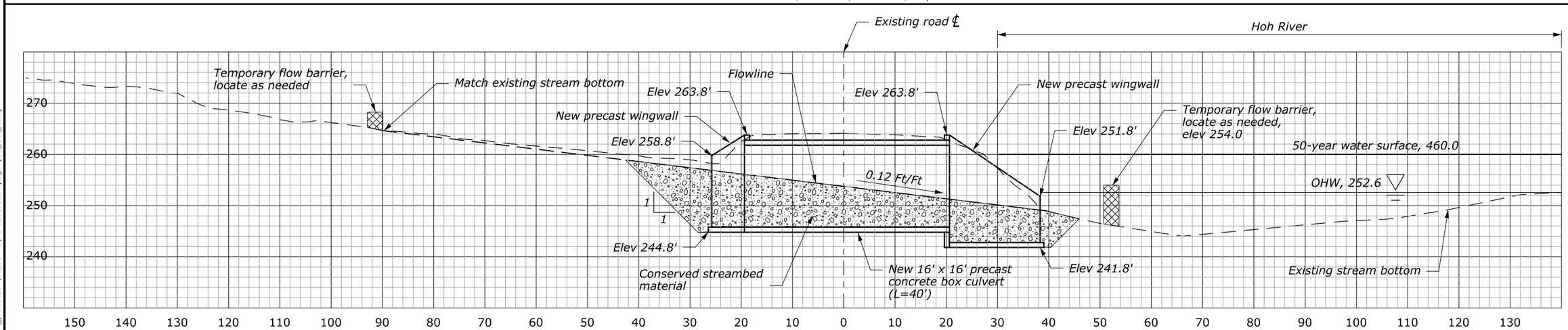

HYDRAULIC INFORMATION	PIPE	INLET	OUTLET
Q_2: 71 cfs OHW: 1.2 feet	TYPE: Precast Concrete SPAN: 16'-0" RISE: 16'-0"	INV N/E/EL: 245.8	INV N/E/EL: 245.8
Q_{50}: 150 cfs HW_{50}: 4.4 feet	LENGTH: 40 feet WALL THICKNESS: 10 in	BURIAL DEPTH: 10.0 feet	BURIAL DEPTH: 5.4 feet
FISH SPECIES:	PIPE SLOPE: 0.0 ft/ft FLOWLINE SLOPE: 0.12 ft/ft	LOWER BEVEL HEIGHT: 14.0 feet	LOWER BEVEL HEIGHT: 9.0 feet
INSTREAM WORK WINDOW:	INFILL TYPE: SBM TYPE: Conserved	BEVEL: 2.0(h):1(v)	BEVEL: 2.0(h):1(v)
ACTIVE CHANNEL WIDTH: 12 feet		HEADWALL: Precast Conc./Riprap	HEADWALL: Precast Conc./Riprap

MP 4.0 AOP CULVERT PLAN & PROFILE

Designed by: --/--- Checked by: --/---

c:\myfiles\pw_production\d0290746\wa-a20130206q.dgn [US_Sur_ft2D] 17 April 2017 3:34 PM

STATE	PROJECT	SHEET NUMBER
WA	JEFF 91420(1)	H.15

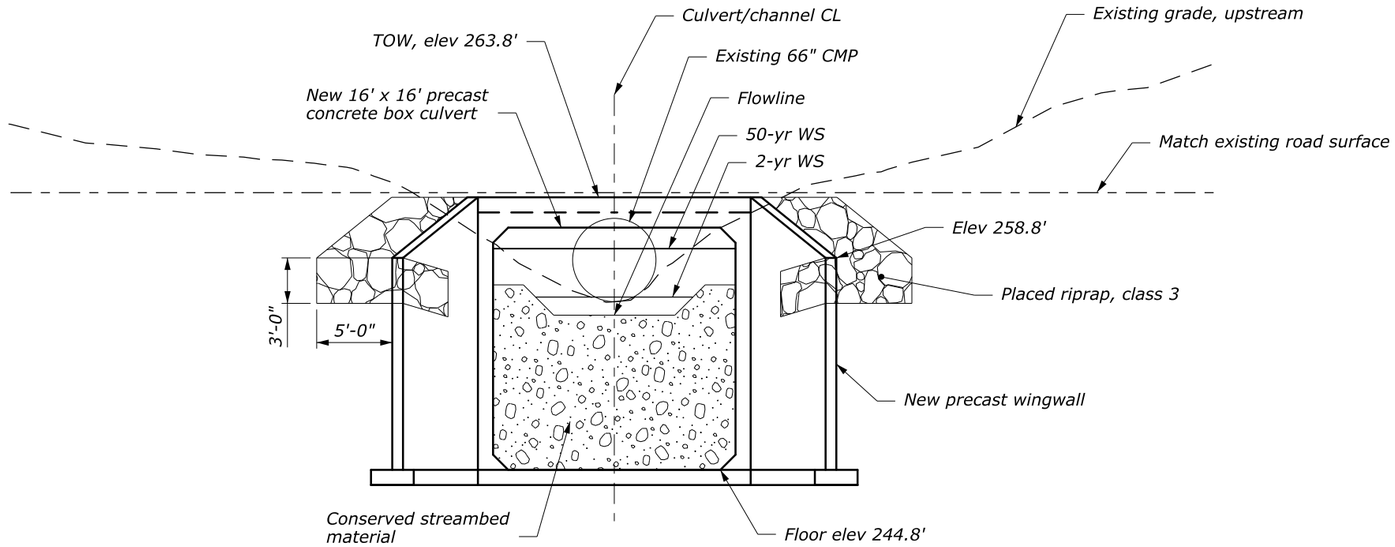

CULVERT INLET

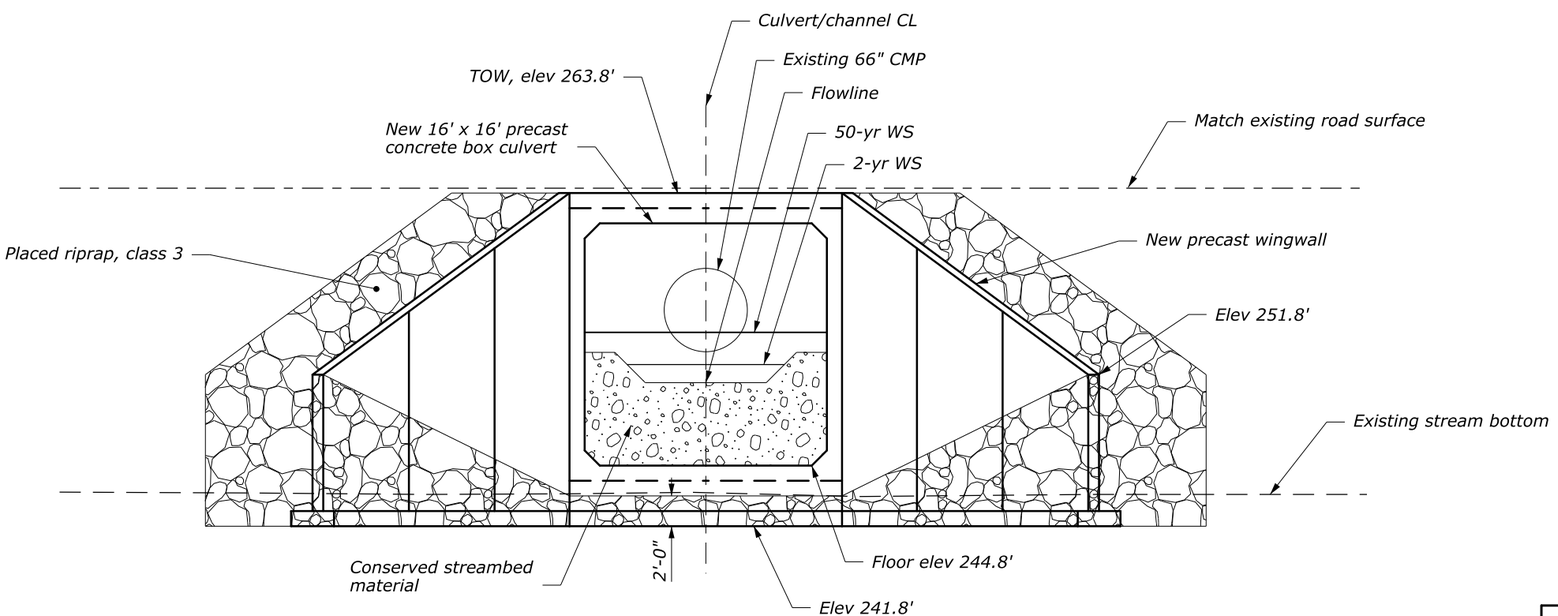

CULVERT OUTLET

Not to scale.

MP 4.0 AOP CULVERT ELEVATIONS

--/---
Checked by:
--/---
Designed by:
c:\myfiles\pw_production\d0290746\wa-a20130206r.dgn [US_Sur_ft2D]
17 April 2017 3:35 PM

STATE	PROJECT	SHEET NUMBER
WA	JEFF 91420(1)	H.16

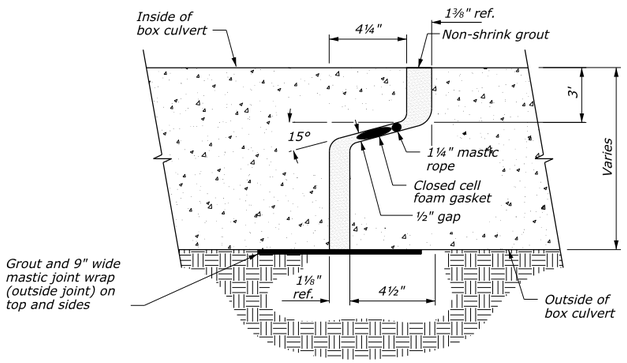

WATERTIGHT BOX JOINT SECTION

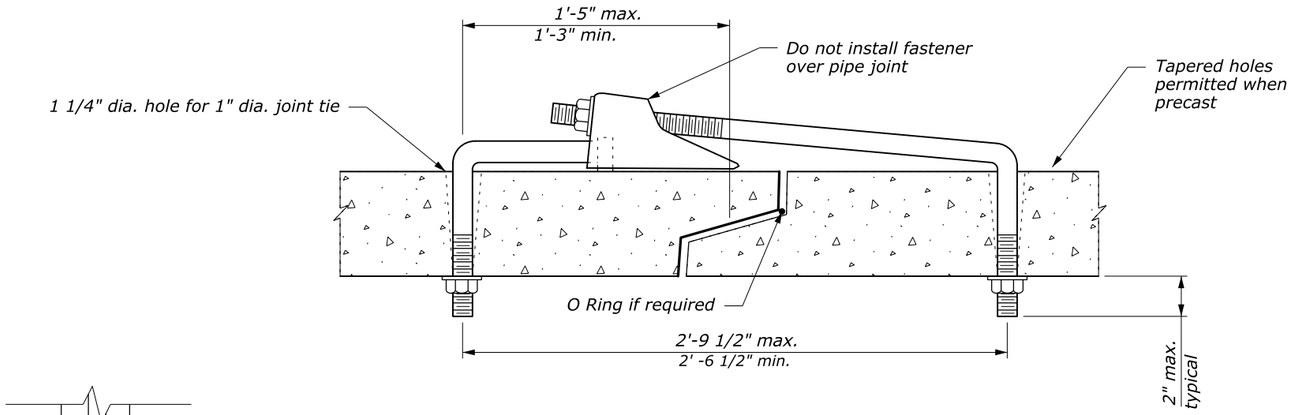

SUPPLEMENTAL CONCRETE PIPE TIE

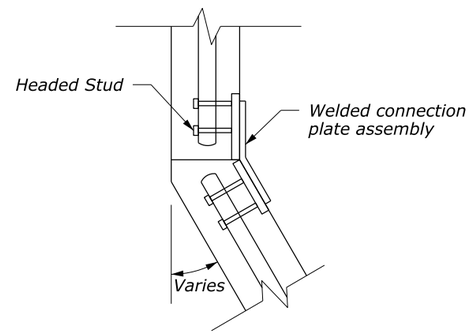

CONNECTION PLATE DETAIL

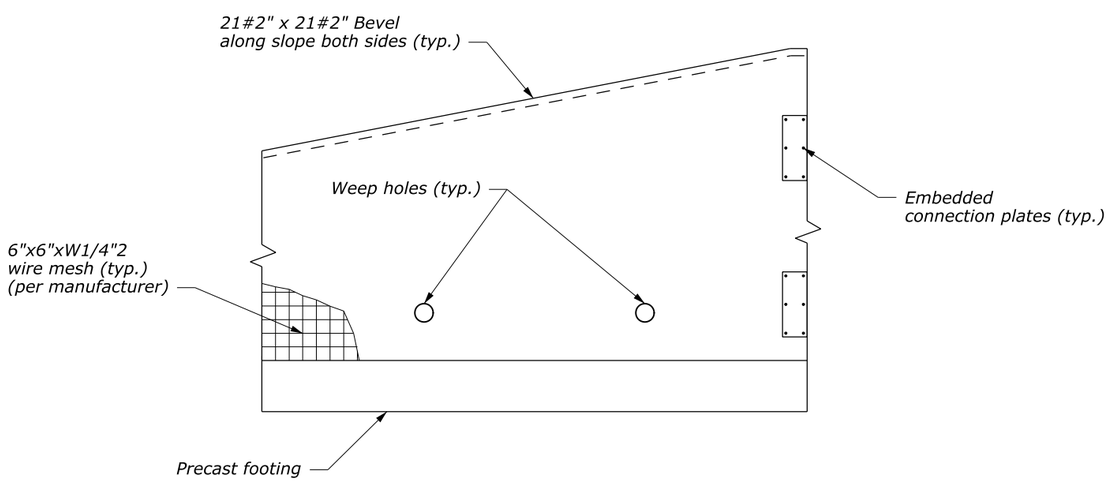

WINGWALL DETAIL

GENERAL NOTES:

CONSTRUCTION:
Detail is for general information only.
Federal Highway Administration Standard Specifications for Construction of Roads and Bridges on Federal Highway Projects, FP-14 (U.S. Customary).
Provide precast concrete culverts conforming to the dimensions, lines, and grades shown in the plans and provide shop drawings for review by the CO.
See section 104.
Install tie rods or connector plates per manufacturer between precast sections.

DESIGN:
Design precast culverts in accordance with Section 602.
Design stem walls, headwalls, wingwalls, and footings in accordance with AASHTO LRFD Bridge Design Specifications, latest edition.

DEAD LOAD:
Concrete: 150 lb per cubic foot.
Soil: 125 lb per cubic foot.

LIVE LOAD:
HL-93.

CONCRETE:
Furnish structural concrete, class A(AE) with minimum 28-day design compressive strength f'c=5000 psi.
Chamfer all exposed edges 3/4-inch.

REINFORCING STEEL:
Furnish reinforcing steel bars conforming to AASHTO M31, deformed (ASTM, A615) grade 60, or welded wire reinforcing conforming to ASTM A1064.
Provide 2-inch minimum concrete cover to the face of any bar.

SOIL:
Unit weight: 125 lbs/cu. ft.
Bearing capacity: 2 ton/sq. ft.

PRECAST BOX CULVERT TYPICAL STRUCTURAL DETAILS

--/---
Checked by:
--/---
Designed by:
c:\myfiles\pw_production\d0290746\wa-a2013020es.dgn [US_Sur_ft2D]
17 April 2017 3:35 PM

STATE	PROJECT	SHEET NUMBER
WA	JEFF 91420(1)	H.17

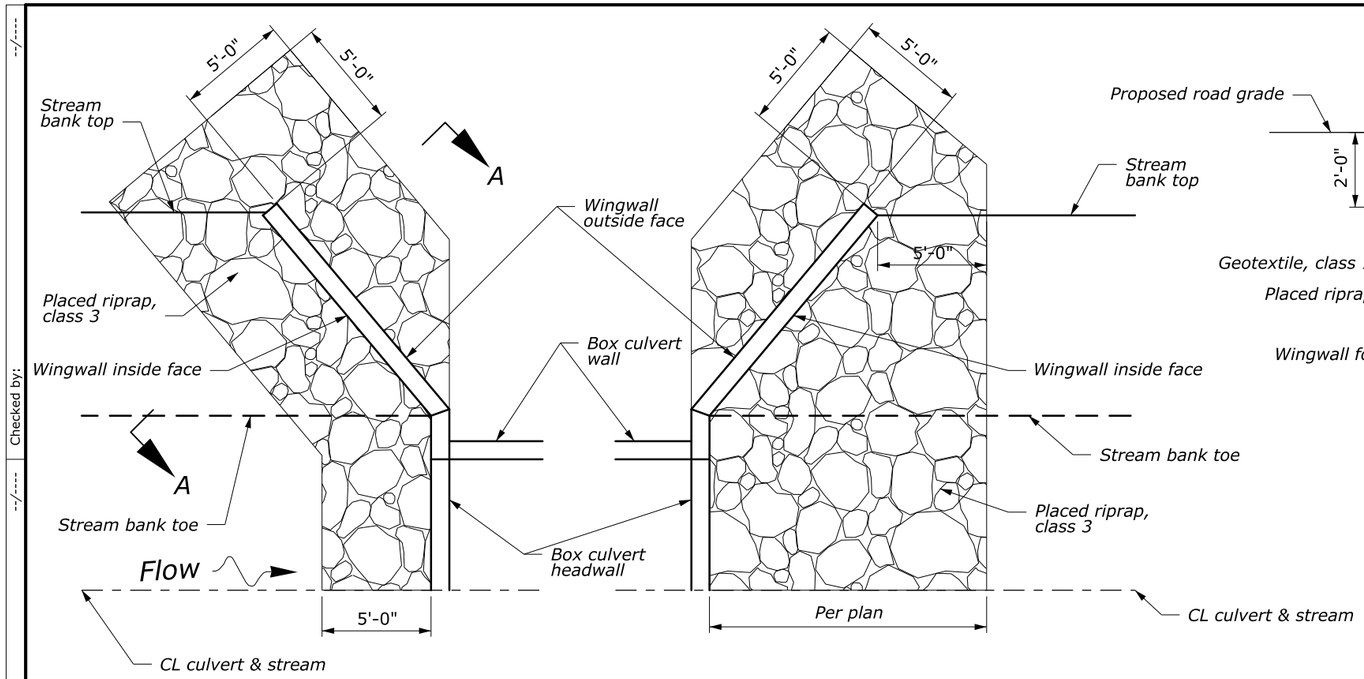

TYPICAL CULVERT PLAN

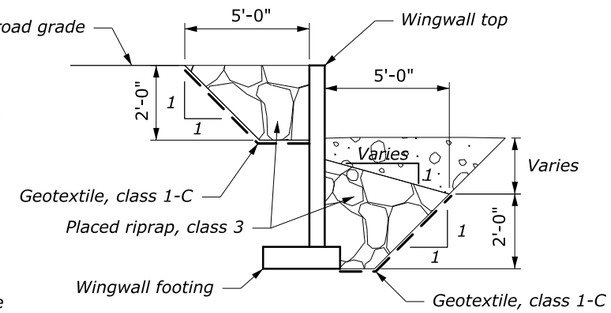

SECTION A-A

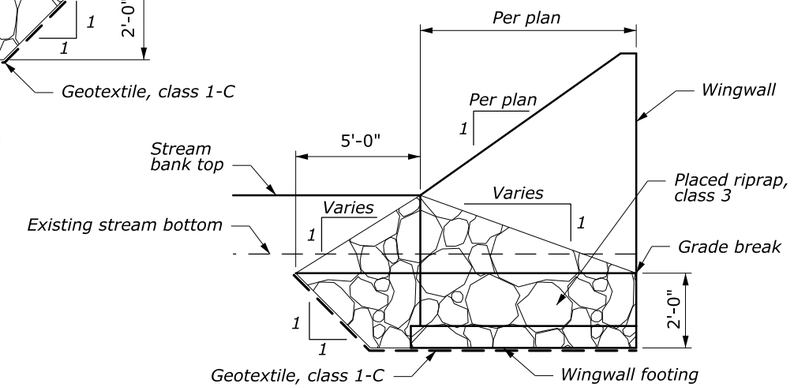

TYPICAL INSIDE WINGWALL FACE ELEVATION

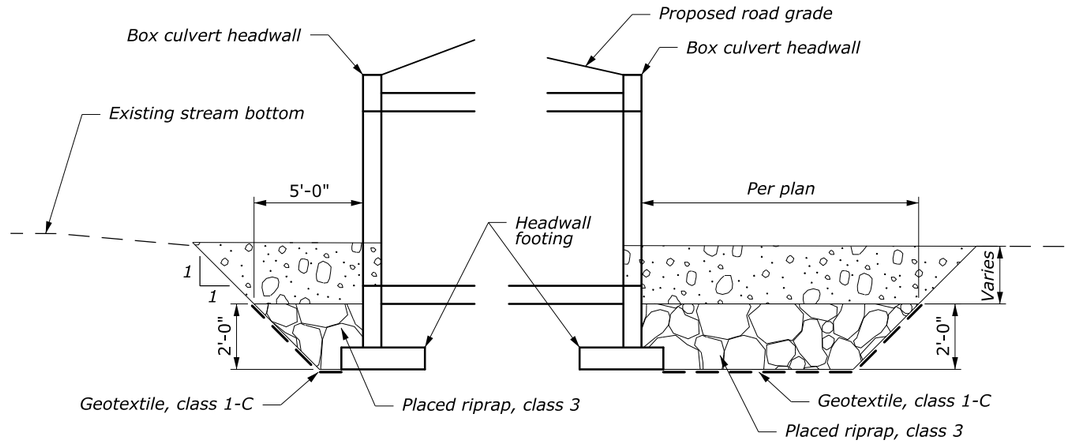

TYPICAL CULVERT & STREAM CHANNEL PROFILE

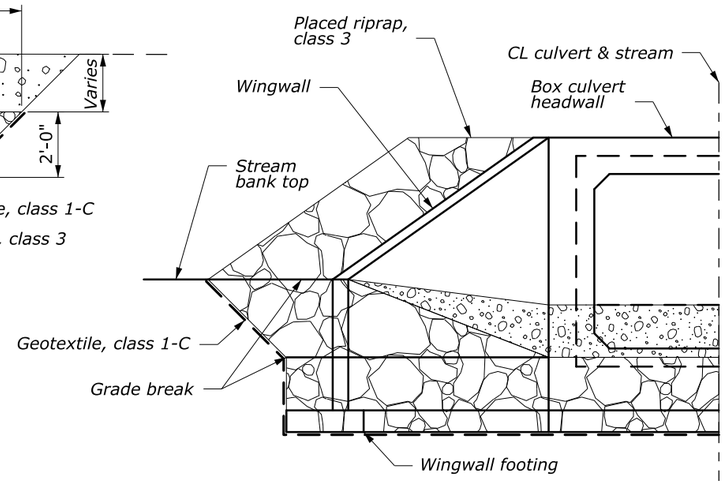

CULVERT INLET/OUTLET ELEVATION

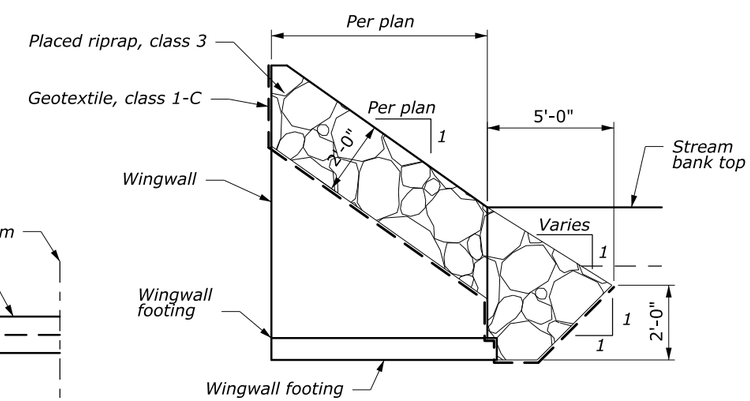

TYPICAL OUTSIDE WINGWALL FACE ELEVATION

NOTE:

1. *Place conserved streambed material over riprap as needed for transition to existing bank top and toe.*

Not to scale

BOX CULVERT RIPRAP DETAILS

Checked by: --/---- Designed by: $DATE$ $PATH$

STATE	PROJECT	SHEET NUMBER
WA	JEFF 91420(1)	H.18

INFILL INFORMATIONAL QUANTITIES 5/

LOCATION	D (ft)	W (ft)	STREAMBED COBBLE GRADATION (in)	STREAMBED COBBLE (cuyd)	STREAMBED SEDIMENT (cuyd)	FISH PASSAGE BOULDER DIAMETER (in +/- 4)	HABITAT STONE (each)	BANK STONE (cuyd)
MP 4.0 AOP Culvert	16	12	Class E	80	170	30	9	14
				—	—		—	—

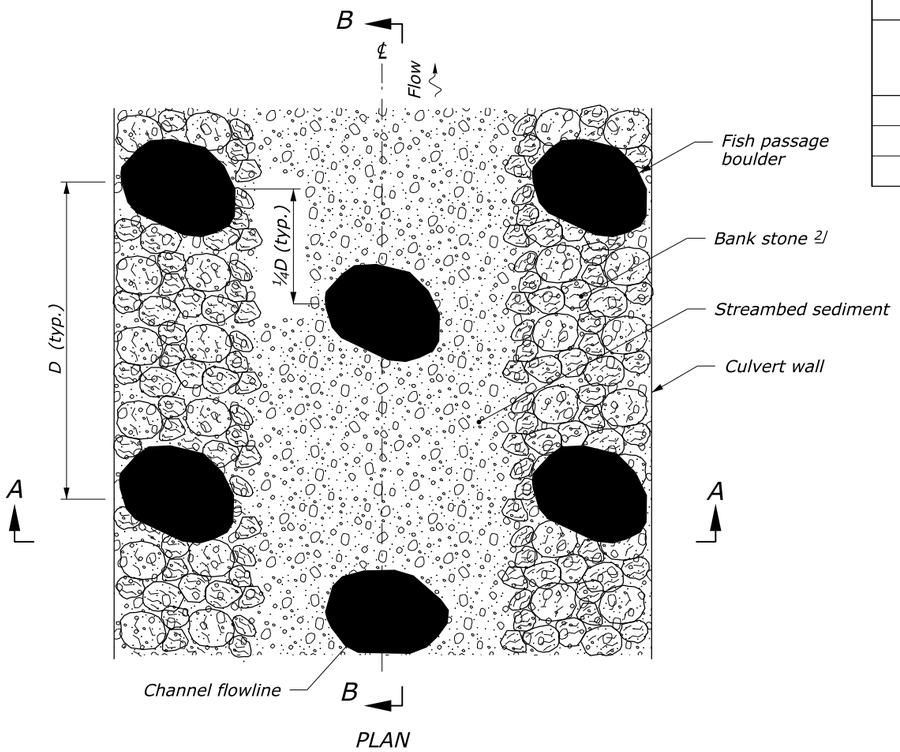

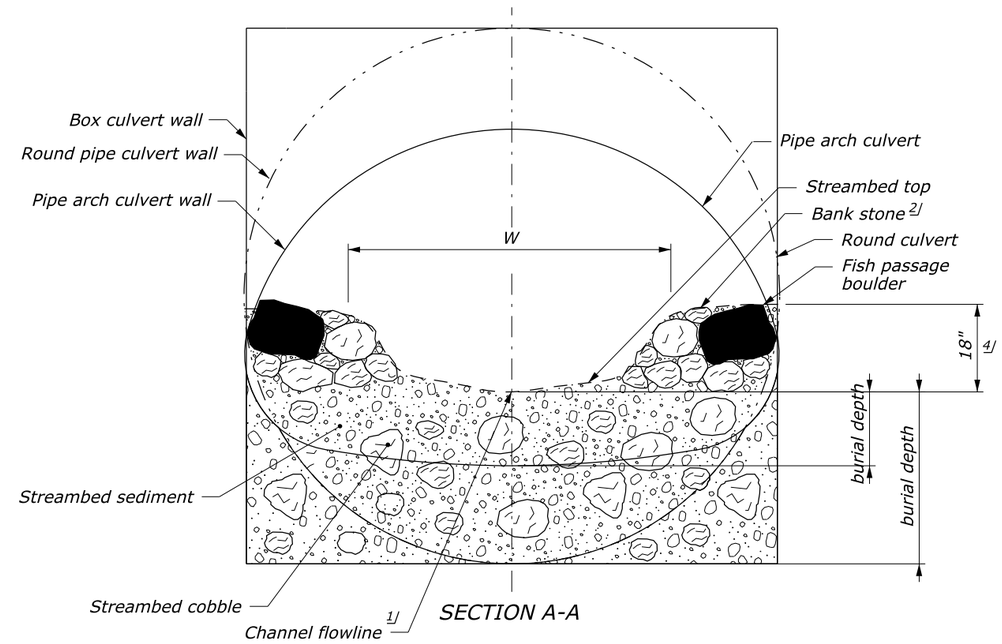

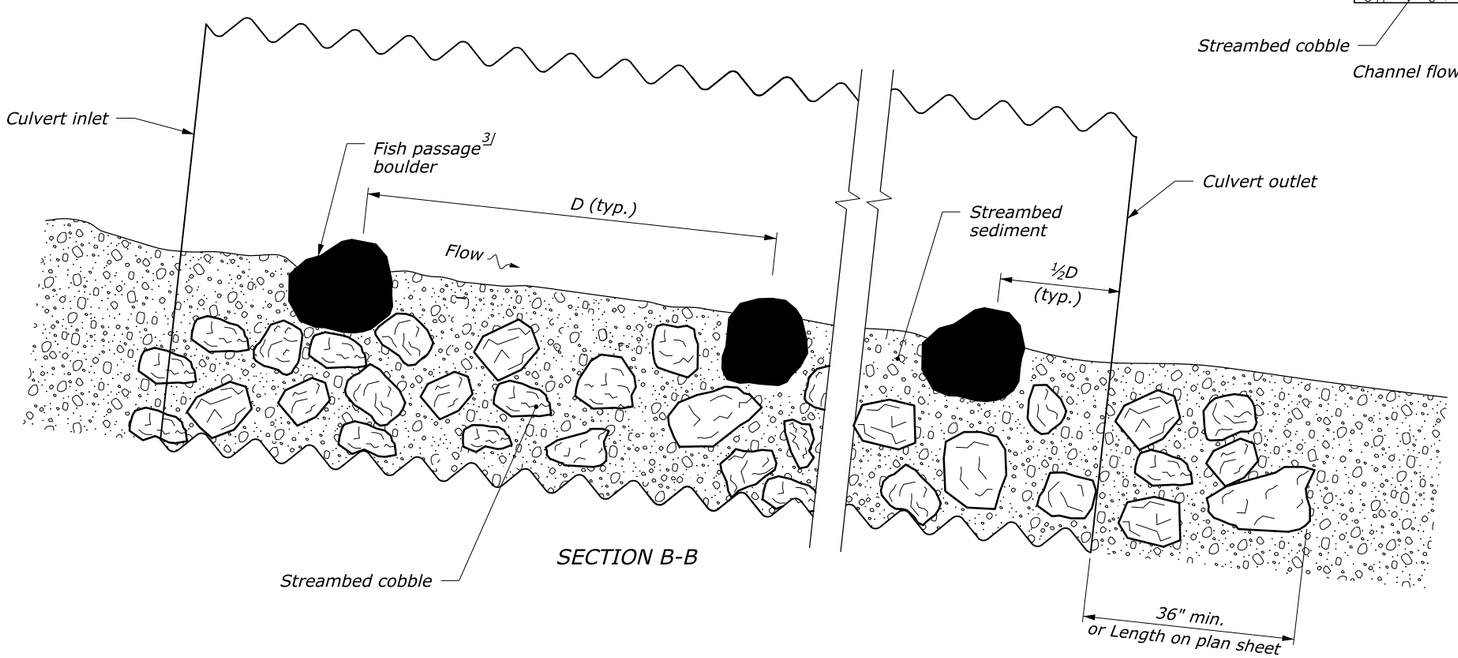

NOTE:

1. Mix streambed cobbles evenly throughout streambed sediment.
2. See special contract requirements for streambed sediment, streambed cobble, and bank stone gradations.
3. Stagger in-channel fish passage boulder within the culvert span.

FOOTNOTE:

1/ Slope streambed aggregate towards flowline to ensure parabolic shape.

2/ Construct well defined banks with bank stone and streambed sediment.

3/ Embed fish passage boulders within active channel ¾ smallest dimension.

4/ 18-inches or as specified on plan sheet.

5/ Quantities included in Item 64704-1000 Mitigation, Streambed Material.

NO SCALE

SIMULATED STREAM CULVERT INTERIOR TREATMENT

X/XXXX | Checked by: | X/XXXX | Designed by: | $DATE$ | $PATH$

STATE	PROJECT	SHEET NUMBER
WA	WA JEFF 91420(1)	H.19

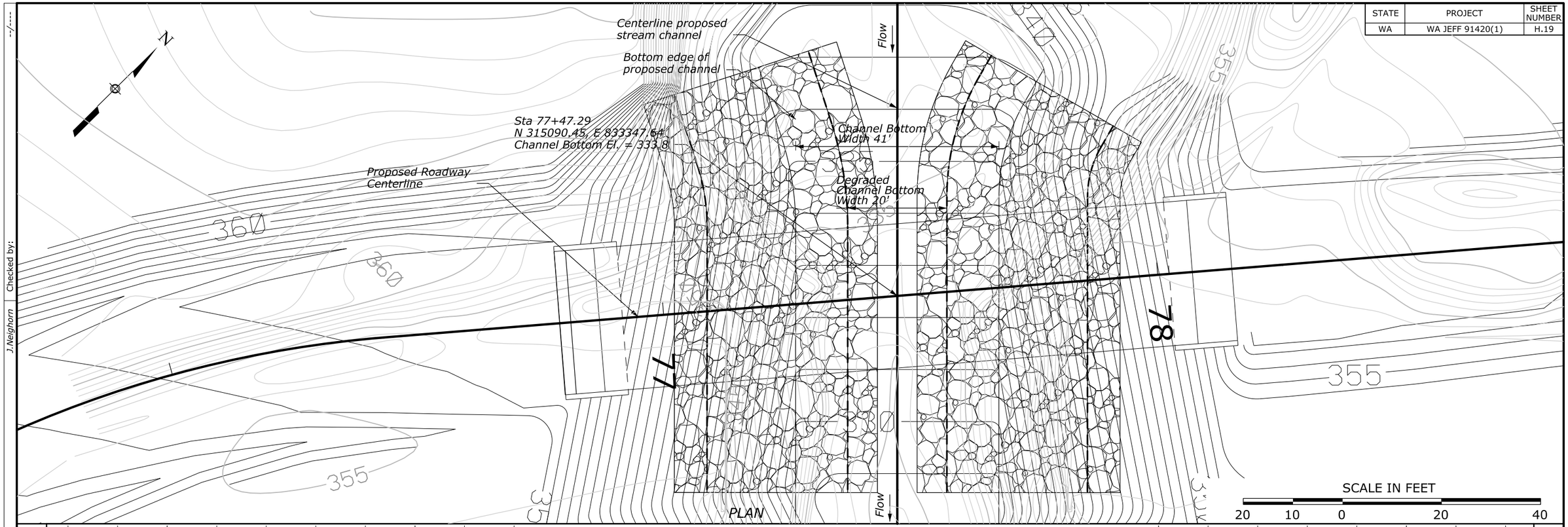

PLAN

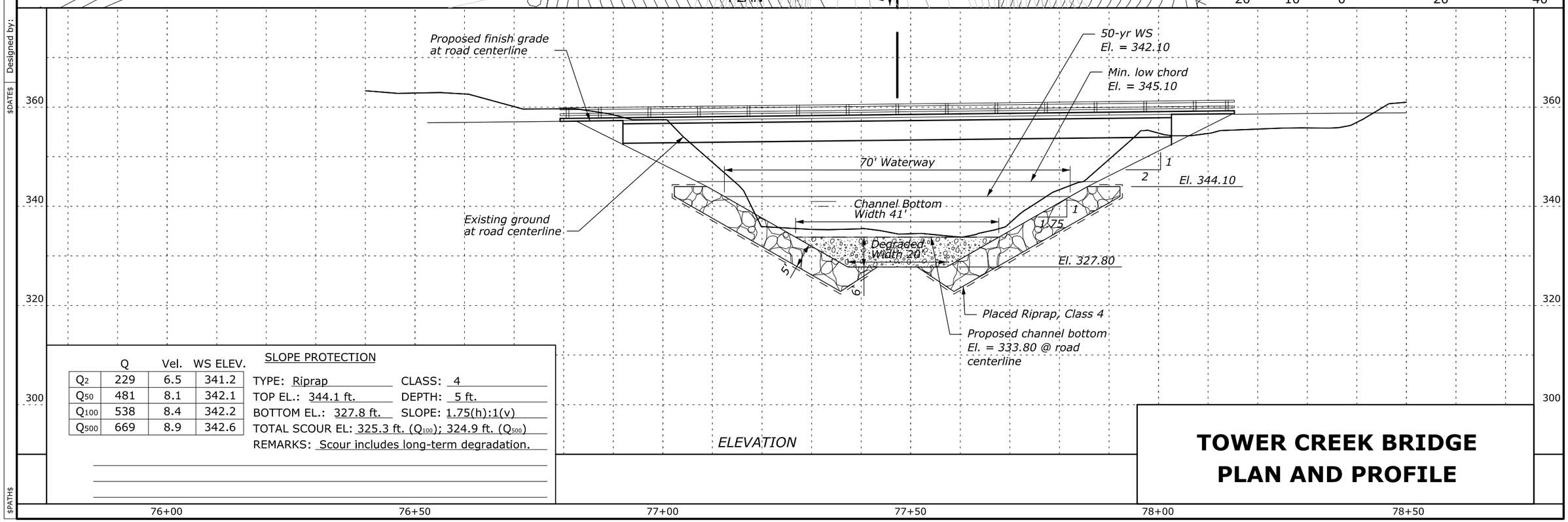

ELEVATION

SLOPE PROTECTION

	Q	Vel.	WS ELEV.
Q_2	229	6.5	341.2
Q_{50}	481	8.1	342.1
Q_{100}	538	8.4	342.2
Q_{500}	669	8.9	342.6

TYPE: Riprap CLASS: 4
TOP EL.: 344.1 ft. DEPTH: 5 ft.
BOTTOM EL.: 327.8 ft. SLOPE: 1.75(h):1(v)
TOTAL SCOUR EL: 325.3 ft. (Q_{100}); 324.9 ft. (Q_{500})
REMARKS: Scour includes long-term degradation.

TOWER CREEK BRIDGE
PLAN AND PROFILE

Designed by: $DATE$ Checked by: J.Neighorn

$PATH$

STATE	PROJECT	SHEET NUMBER
WA	WA JEFF 91420(1)	H.20

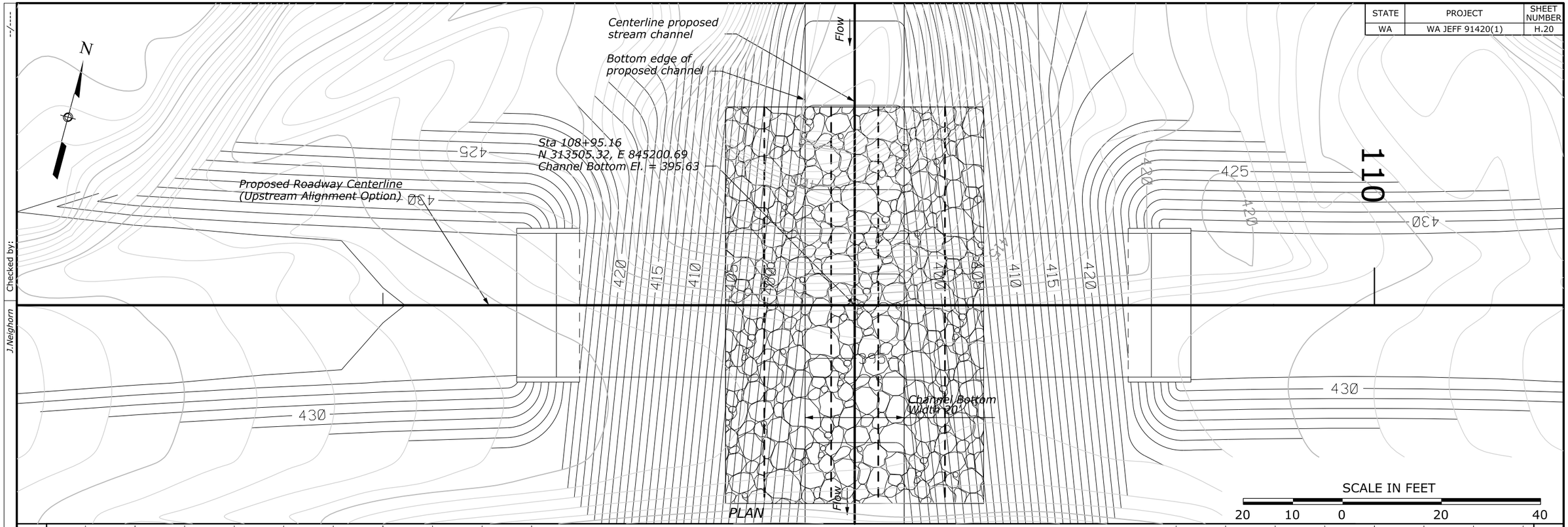

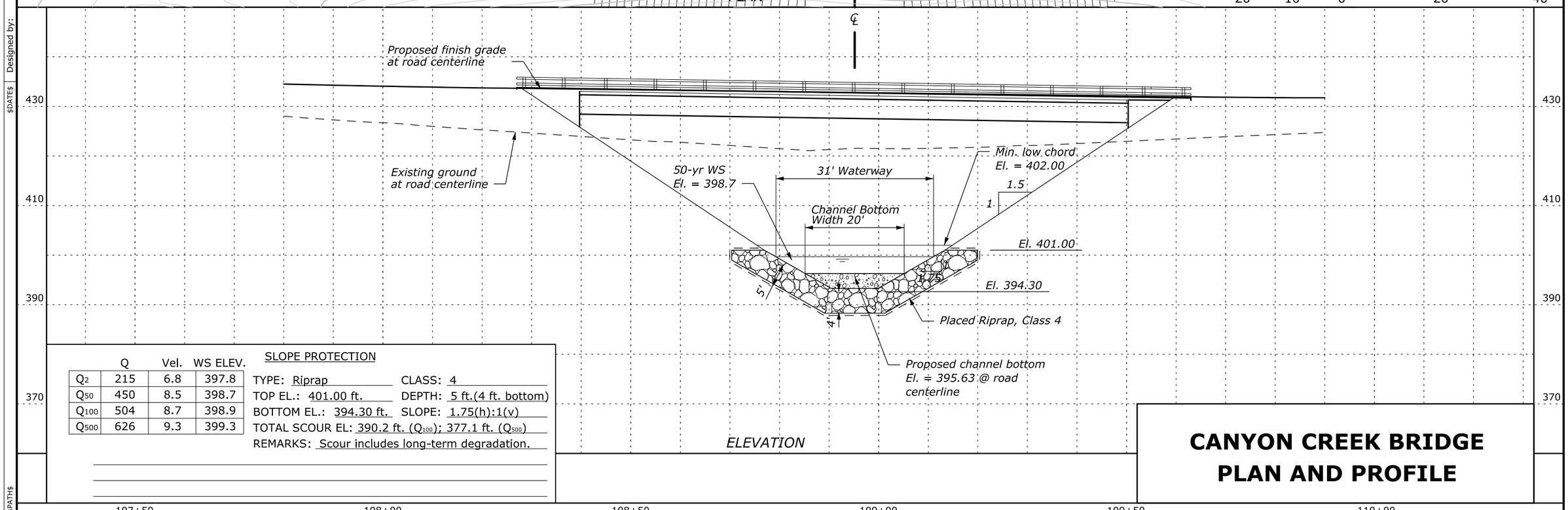

SLOPE PROTECTION

	Q	Vel.	WS ELEV.
Q_2	215	6.8	397.8
Q_{50}	450	8.5	398.7
Q_{100}	504	8.7	398.9
Q_{500}	626	9.3	399.3

TYPE: Riprap CLASS: 4
TOP EL.: 401.00 ft. DEPTH: 5 ft.(4 ft. bottom)
BOTTOM EL.: 394.30 ft. SLOPE: 1.75(h):1(v)
TOTAL SCOUR EL: 390.2 ft. (Q_{100}); 377.1 ft. (Q_{500})
REMARKS: Scour includes long-term degradation.

CANYON CREEK BRIDGE PLAN AND PROFILE

Designed by: $DATE$ Checked by: J.Neighorn

$PATH$

ROADSIDE BARRIER QUANTITIES

LOCATION	SIDE	ITEM 61701-2000 GUARDRAIL SYSTEM G4, TYPE 4, CLASS B WOOD POST (LNFT)	ITEM 61702-0300 TERMINAL SECTION, TYPE G4-BAT (EACH)	ITEM 61702-0800 TERMINAL SECTION, TYPE TANGENT (EACH)	ITEM 61707-0000 STRUCTURE TRANSITION RAILING (LNFT)	REMARKS
48+19.13 to 49+43.01	LT	-	1	-	-	MP 4 AOP
49+43.01 to 49+55.48		12.5	-	-	-	
49+55.48 to 50+79.67		-	1	-	-	
48+34.34 to 48+71.93	RT	-	-	1	-	
48+71.91 to 49+84.69		112.5	-	-	-	
49+84.69 to 50+22.16		-	-	1	-	
73+31.48 to 76+68.19	LT	-	-	1	-	TOWER CREEK BRIDGE
76+68.19 to 76+81.27		-	-	-	13	
76+17.00 to 76+56.07	RT	-	-	1	-	
76+56.07 to 76+68.57		12.5	-	-	-	
76+68.57 to 76+81.66		-	-	-	13	
78+12.25 to 78+25.33	LT	-	-	-	13	
78+25.33 to 78+37.83		12.5	-	-	-	
78+37.33 to 78+62.81		-	-	1	-	
78+12.25 to 78+25.33	RT	-	-	-	13	
78+25.33 to 78+62.81		-	-	1	-	
107+87.19 to 108+24.67	LT	-	-	1	-	CANYON CREEK BRIDGE
108+24.67 to 108+37.75		-	-	-	13	
107+74.69 to 108+12.17	RT	-	-	1	-	
108+12.17 to 108+24.67		12.5	-	-	-	
108+24.67 to 108+37.75		-	-	-	13	
109+52.25 to 109+65.33	LT	-	-	-	13	
109+65.33 to 109+77.83		12.5	-	-	-	
109+77.83 to 110+15.31		-	-	1	-	
109+52.25 to 109+65.33	RT	-	-	-	13	
109+65.33 to 110+15.31		-	-	1	-	
TOTAL		**175**	**2**	**10**	**104**	

70% PLAN IN HAND 04-18-2017

ROADSIDE TABULATION OF QUANTITIES

Designed by: C. Conrad 01/2017 Checked by: --/---
c:\myfiles\pw_production\d0290749\wa-a2013020ra.dgn [US_Sur_ft2D]
20 January 2017 7:14 AM

STATE	PROJECT	SHEET NUMBER
WA	JEFF 91420(1)	I.2

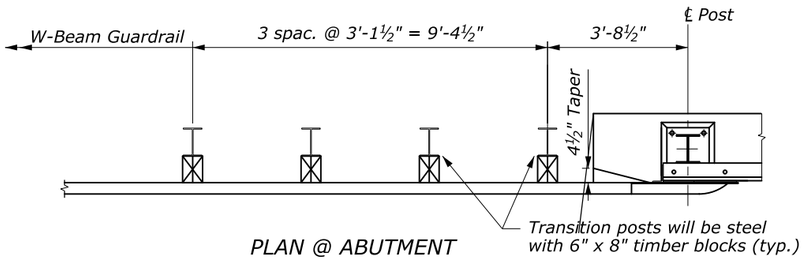

PLAN @ ABUTMENT
SCALE: ½" = 1'-0"

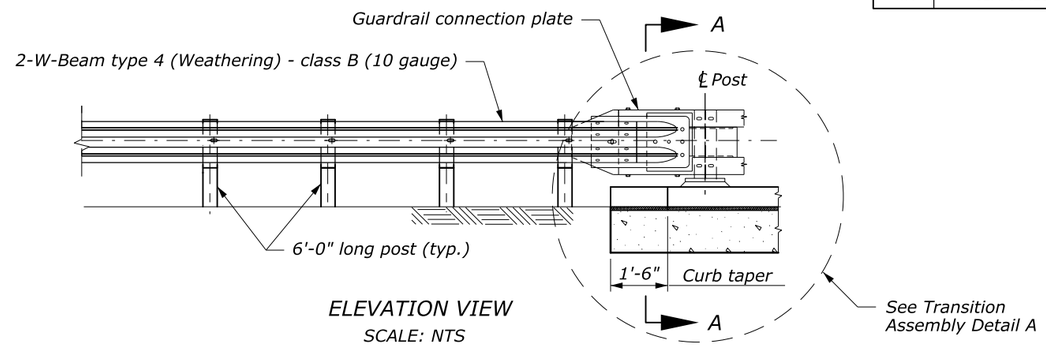

ELEVATION VIEW
SCALE: NTS

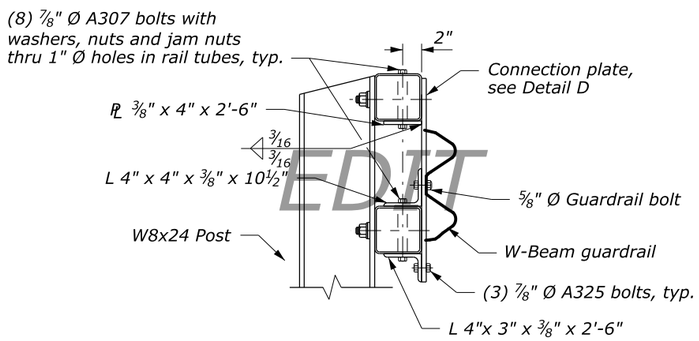

SECTION A-A
SCALE: 1½" = 1'-0"

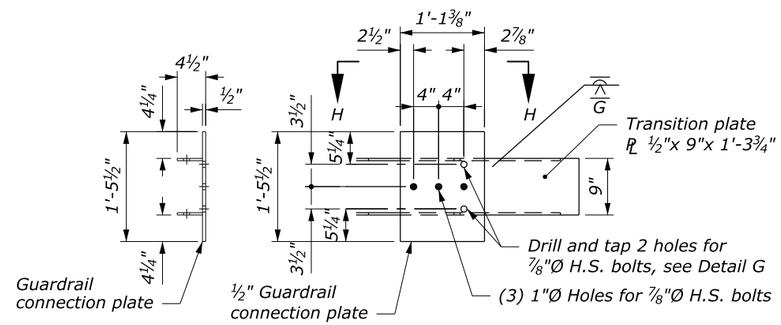

DETAIL D
GUARDRAIL CONNECTION PLATE

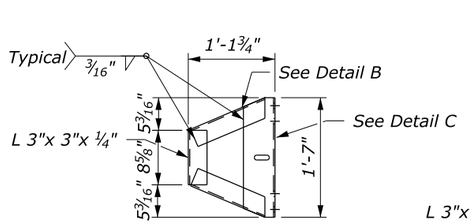

DETAIL A
TRANSITION ASSEMBLY

DETAIL B

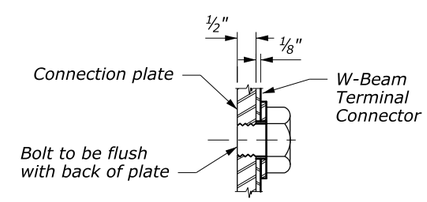

DETAIL G

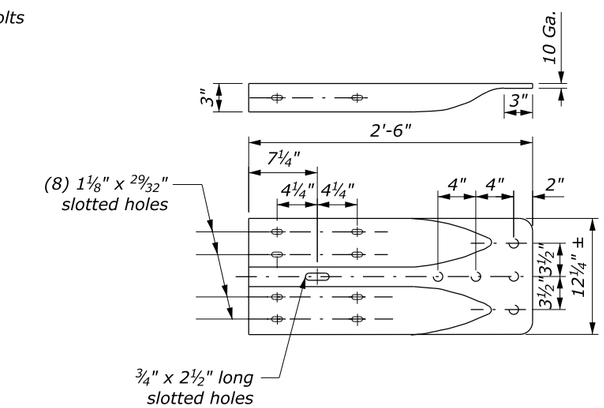

TERMINAL CONNECTOR
SCALE: 1½" = 1'-0"

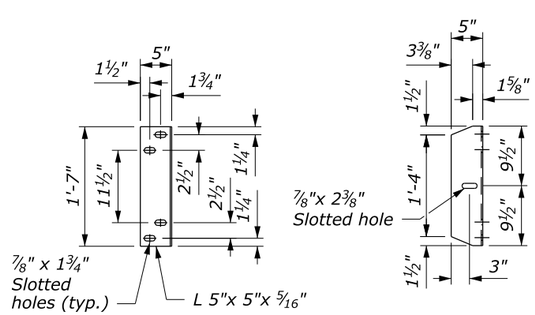

DETAIL C

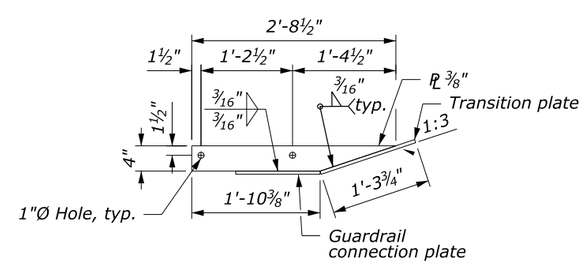

BRIDGE APPROACH RAILING DETAILS

70% PLAN IN HAND 04-18-2017

Designed by: --/---- Checked by: --/----

18 January 2017 1:38 PM c:\myfiles\pw_production\d0290749\wa-a201320ra.dgn [US_Sur_ft2D]

STATE	PROJECT	SHEET NUMBER
WA	JEFF 91420(1)	I.3

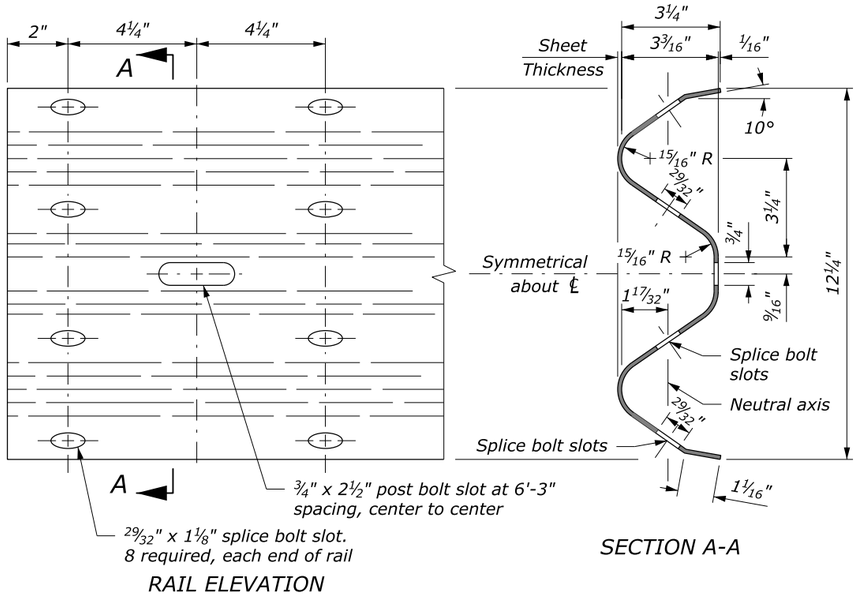

RAIL ELEVATION

SECTION A-A

W BEAM RAIL

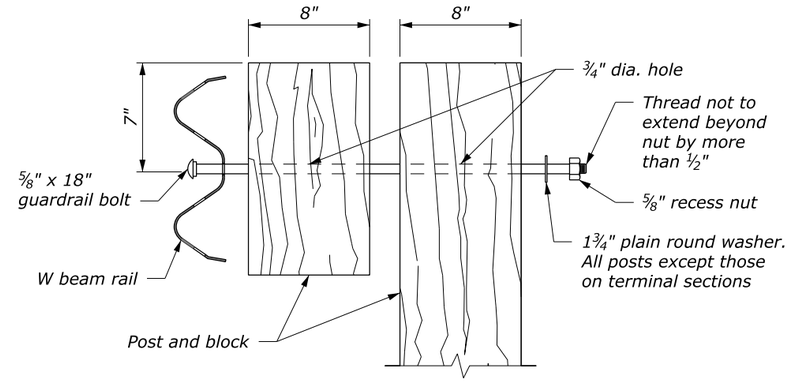

POST BOLT ASSEMBLY

NOTE:

1. When encountering impenetrable material, see Standards 617-13 or 617-24.
2. See Special Contract Requirements when 7 foot or longer posts are specified.
3. See Special Contract Requirements when the alternative hole arrangement is specified.
4. Install reflector tab between post bolt and rail, every fourth post. Alternate reflector tab shapes are acceptable.
5. Dimensional tolerances not shown or implied are intended to be those consistent with the proper functioning of the part, including its appearance, and accepted manufacturing practices.

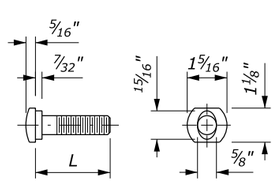

⅝" GUARDRAIL BOLT

L	Thread Length
1¼"	1⅛" minimum
2"	1¾" minimum
10"	4" minimum
18"	4" minimum
25"	4" minimum

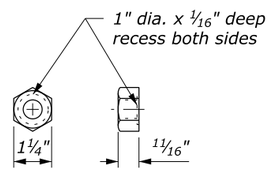

⅝" RECESS NUT

GUARDRAIL BOLT AND RECESS NUT

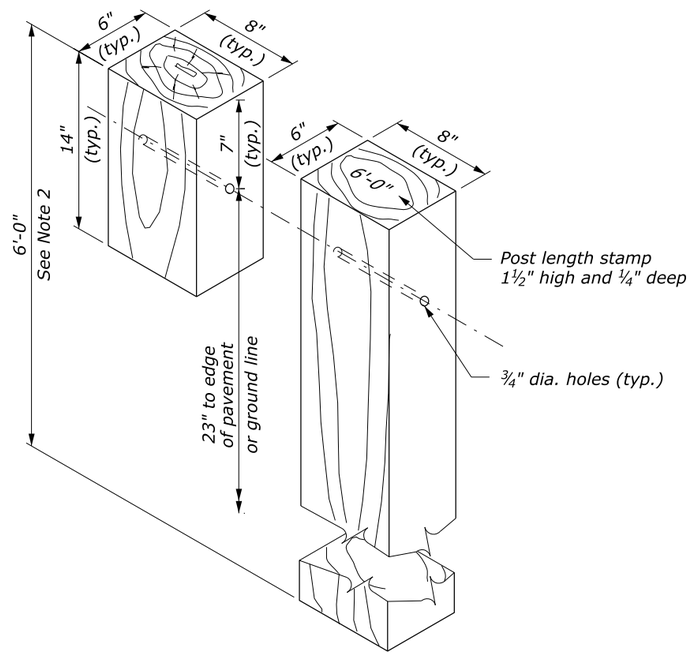

STANDARD HOLE ARRANGEMENT POST AND BLOCK DETAIL

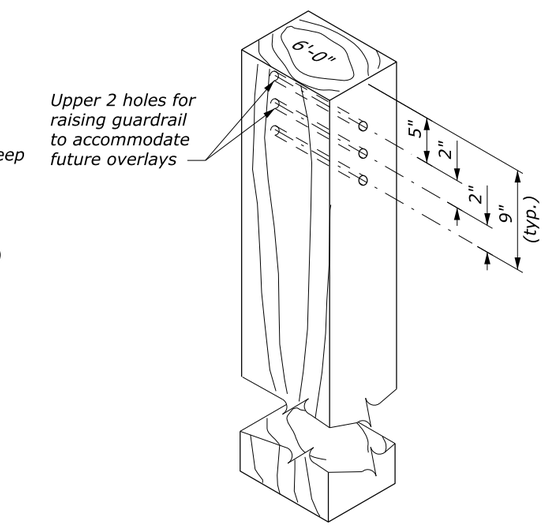

ALTERNATE HOLE ARRANGEMENT POST AND BLOCK DETAIL

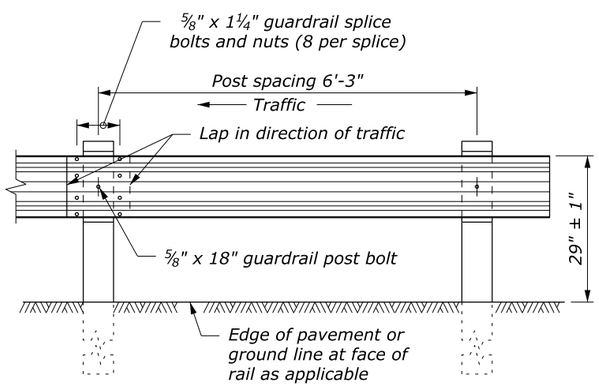

POST SPACING STANDARD POST SECTION

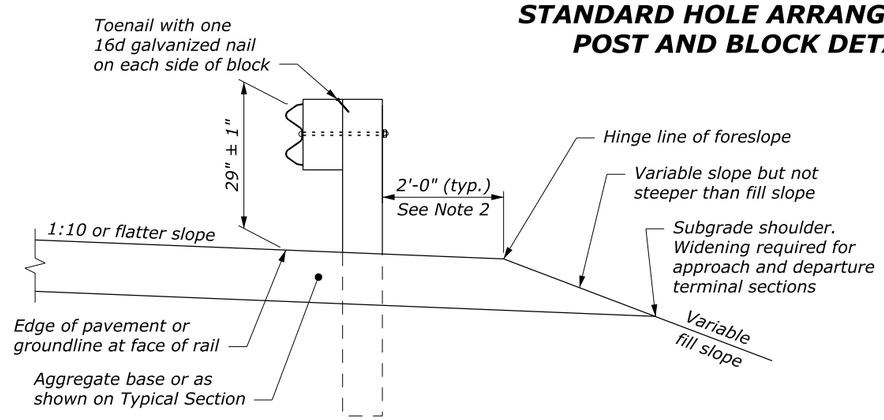

TYPICAL GUARDRAIL CROSS SECTION

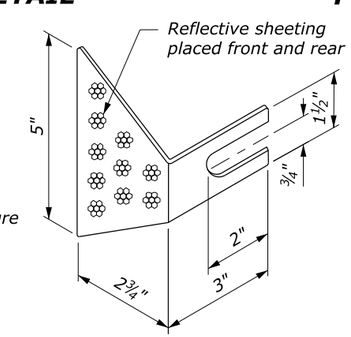

REFLECTOR TAB
(See Note 4)

NO SCALE

U.S. DEPARTMENT OF TRANSPORTATION
FEDERAL HIGHWAY ADMINISTRATION
FEDERAL LANDS HIGHWAY

U.S. CUSTOMARY STANDARD

G4 W-BEAM GUARDRAIL WOOD POSTS

STANDARD APPROVED FOR USE 1/1994

REVISED: 4/1994 6/2005
DRAFT: 10/2013

STANDARD 617-10

70% PLAN IN HAND 04-18-2017

c:\myfiles\pw_production\d0290749\wa-a2013020rb-Std617-10.dgn [USC]
6 June 2016 4:06 PM

STATE	PROJECT	SHEET NUMBER
WA	JEFF 91420(1)	I.4

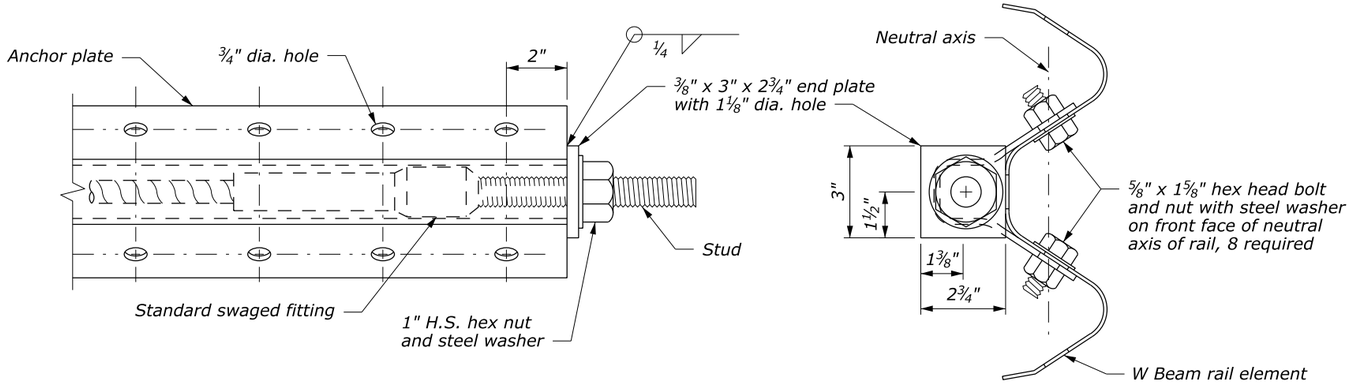

ANCHOR PLATE DETAILS FOR LST ANCHORAGE ASSEMBLY

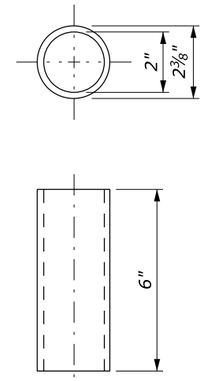

POST SLEEVE

NOTE:

1. Dimensional tolerances not shown or implied are intended to be those consistent with the proper functioning of the part, including its appearance, and accepted manufacturing practices.

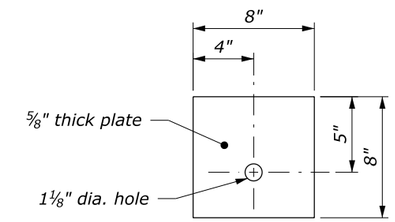

BEARING PLATE

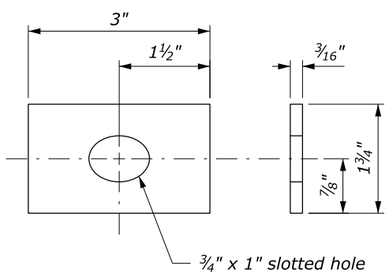

RECTANGULAR PLATE WASHER

(Use to attach the section to the post of anchorage assembly)

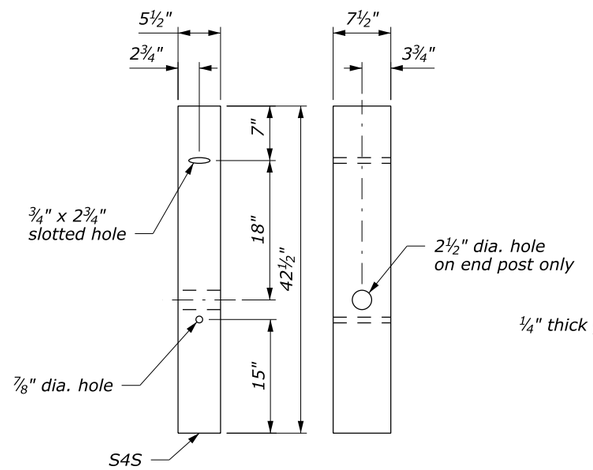

TERMINAL POST

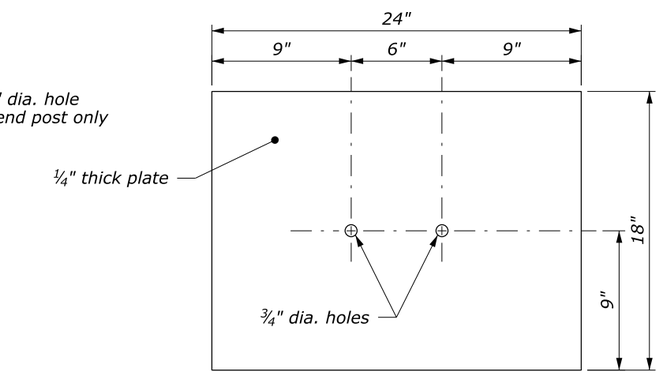

SOIL PLATE

(2 REQUIRED)

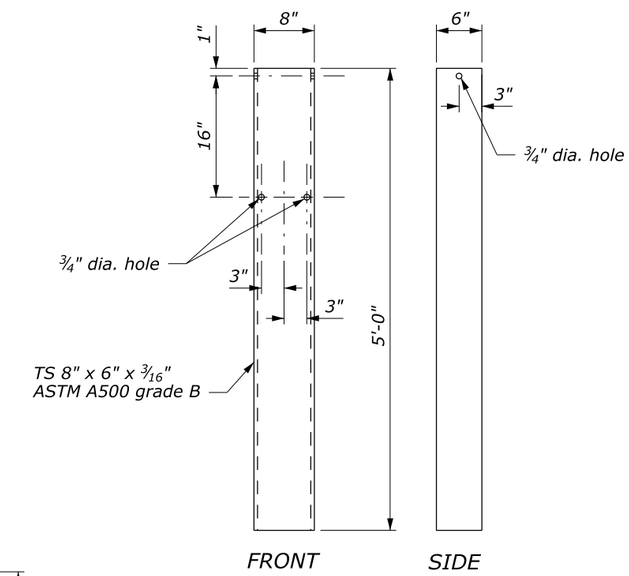

STEEL TUBE ANCHOR

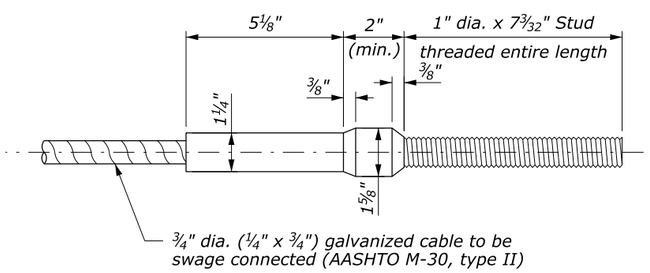

CABLE ASSEMBLY
(Standard swaged fitting and stud)

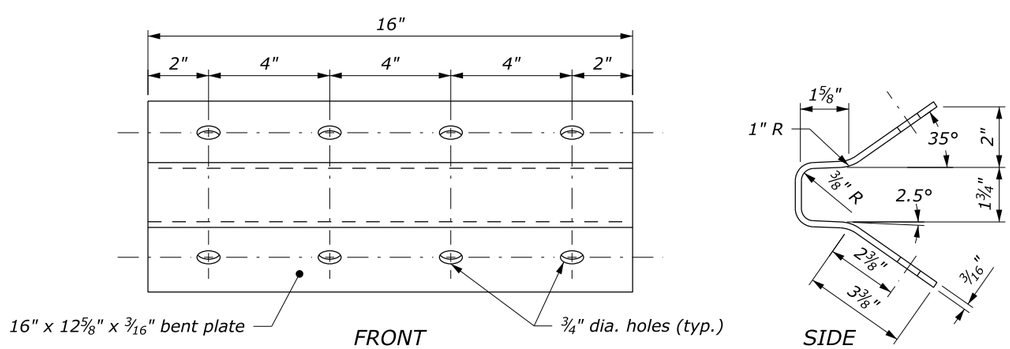

GUARDRAIL ANCHOR PLATE

NO SCALE

U.S. DEPARTMENT OF TRANSPORTATION
FEDERAL HIGHWAY ADMINISTRATION
FEDERAL LANDS HIGHWAY

U.S. CUSTOMARY STANDARD

G4 W-BEAM GUARDRAIL MELT, LST & CRT ANCHORAGE ASSEMBLY DETAILS

STANDARD APPROVED FOR USE 1/1994
REVISED: 4/1994 6/2005
DRAFT: 5/2014

STANDARD 617-15

70% PLAN IN HAND 04-18-2017

c:\myfiles\pw_production\d0290749\wa-a2013020rd-Std.617-15.dgn [USC]

6 June 2016 4:07 PM

STATE	PROJECT	SHEET NUMBER
WA	JEFF 91420(1)	I.5

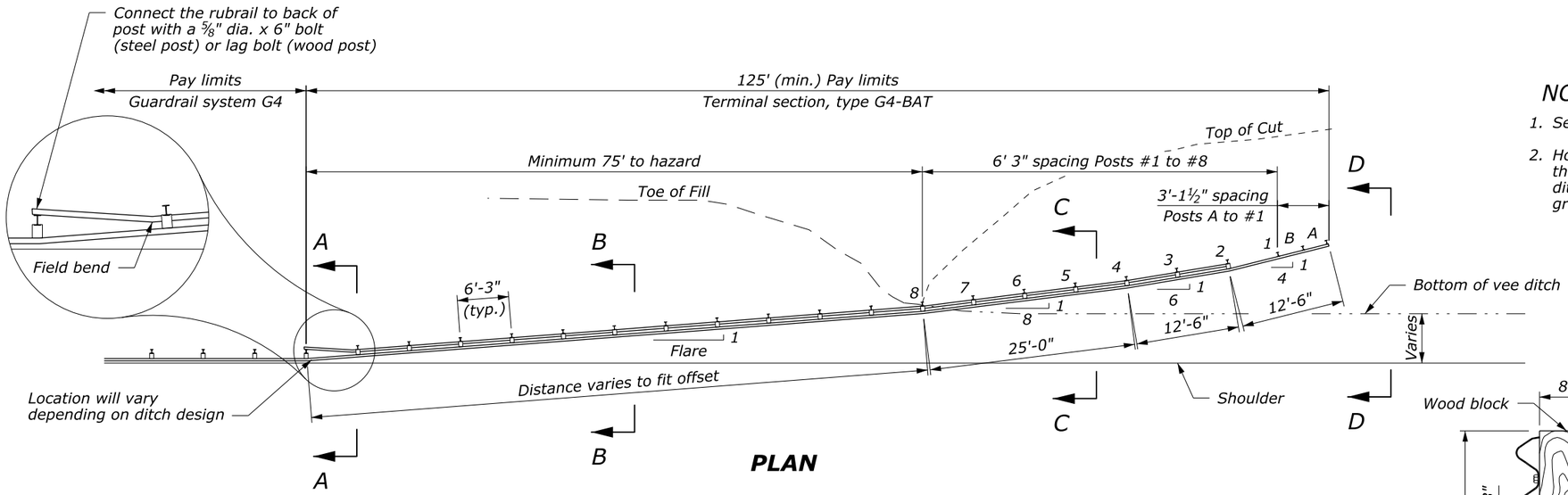

PLAN

NOTE:

1. See Standards 617-10 and 617-11 for other details.
2. Hold the height of the W-beam rail constant in relation to the roadway shoulder elevation until the barrier crosses the ditch bottom. Add the rubrail when the distance from the ground to the bottom of the W-beam exceeds 18".

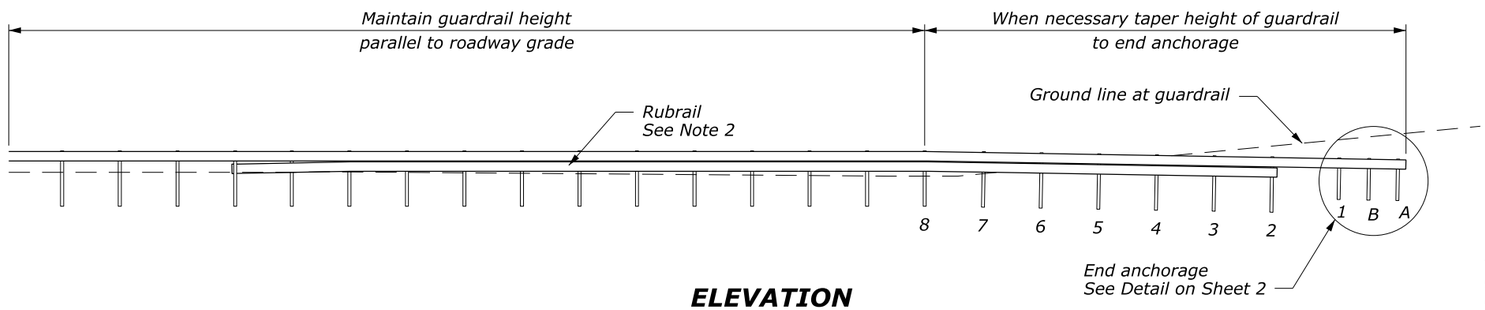

ELEVATION
ALONG RAIL

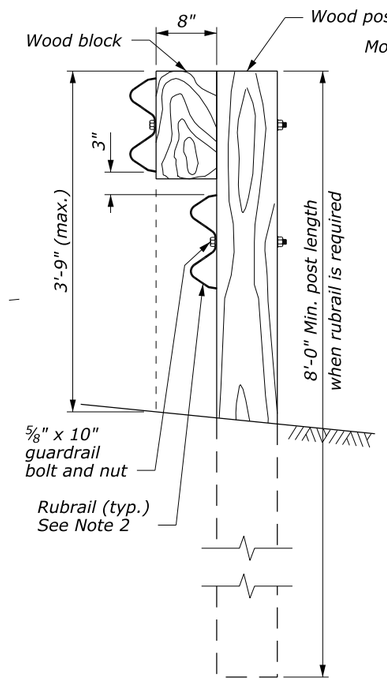

ELEVATION

WOOD POST AND BLOCK DETAIL

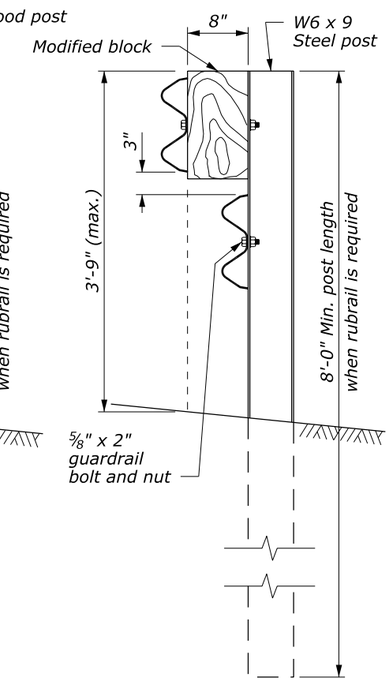

ELEVATION

STEEL POST AND BLOCK DETAIL

GUARDRAIL FLARE	
DESIGN SPEED MPH	FLARE
70	15
60	14
55	12
50	11
45	10
< 35	8

POST OFFSETS FROM VEE DITCH BOTTOM	
POST	DISTANCE
A	8'
#2	5'
#4	3'
#8	0

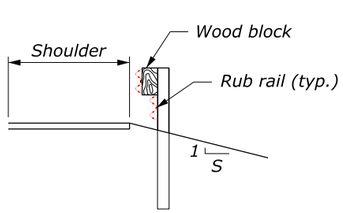

SECTION A-A

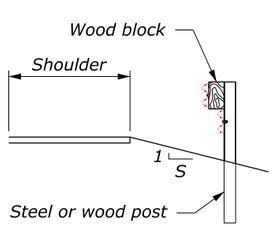

SECTION B-B

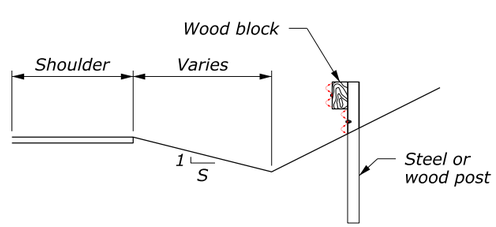

SECTION C-C

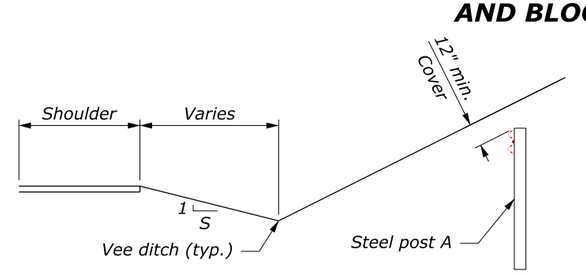

SECTION D-D

NO SCALE

U.S. DEPARTMENT OF TRANSPORTATION
FEDERAL HIGHWAY ADMINISTRATION
FEDERAL LANDS HIGHWAY

U.S. CUSTOMARY STANDARD

G4 W-BEAM GUARDRAIL BACK SLOPE ANCHOR TERMINAL TYPE G4-BAT

Sheet 1 of 2

STANDARD APPROVED FOR USE 1/1994

REVISED: 4/1994 6/2005
DRAFT: 5/2014

STANDARD 617-17

70% PLAN IN HAND 04-18-2017

1 October 2014 2:09 PM c:\myfiles\pw_production\d0290749\wa-a2013020re-Std.617-17.dgn [USC]

STATE	PROJECT	SHEET NUMBER
WA	JEFF 91420(1)	I.6

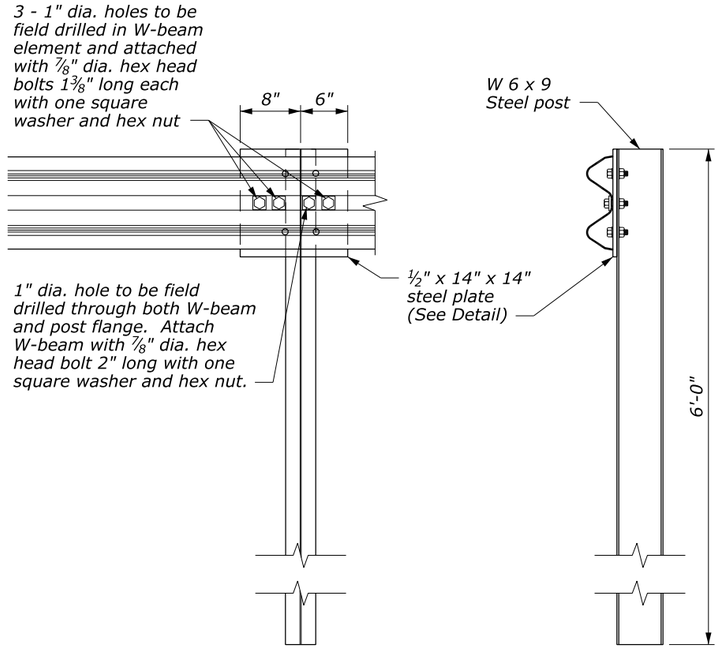

SPECIAL RAIL TO POST CONNECTION AT POSTS A, B, AND 1

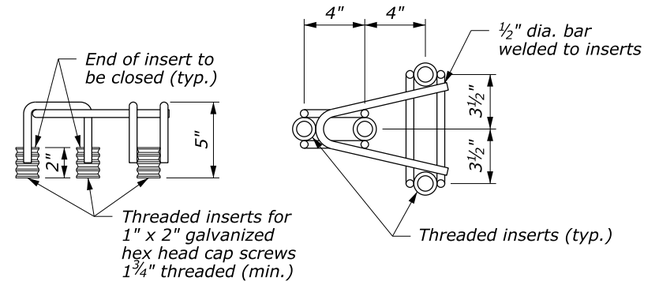

FRAMEWORK FOR THREADED INSERTS

NOTE:

1. See Standard 617-10 and 617-11 for block detail and attachment.
2. See Sheet 1 of 2 for terminal layout.
3. For posts #3 and higher, match post material of adjacent guardrail run, unless otherwise noted.
4. Use zinc rich paint to coat field drilled holes.

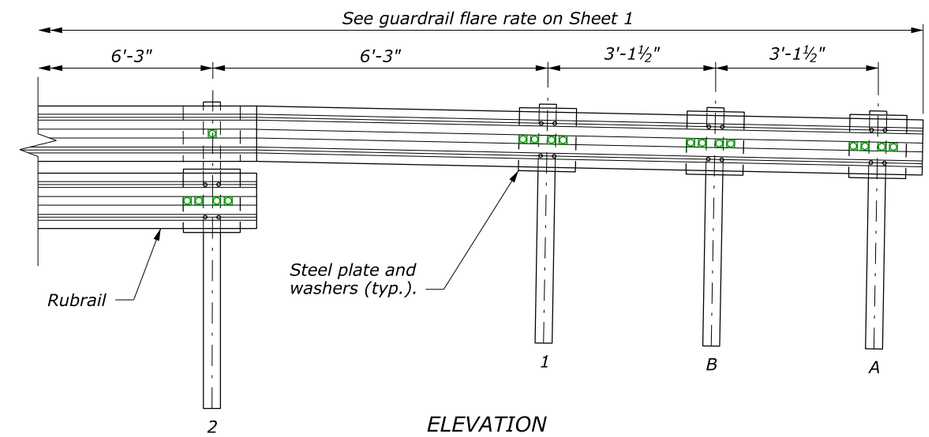

END ANCHORAGE DETAIL POSTS A, B, 1, 2

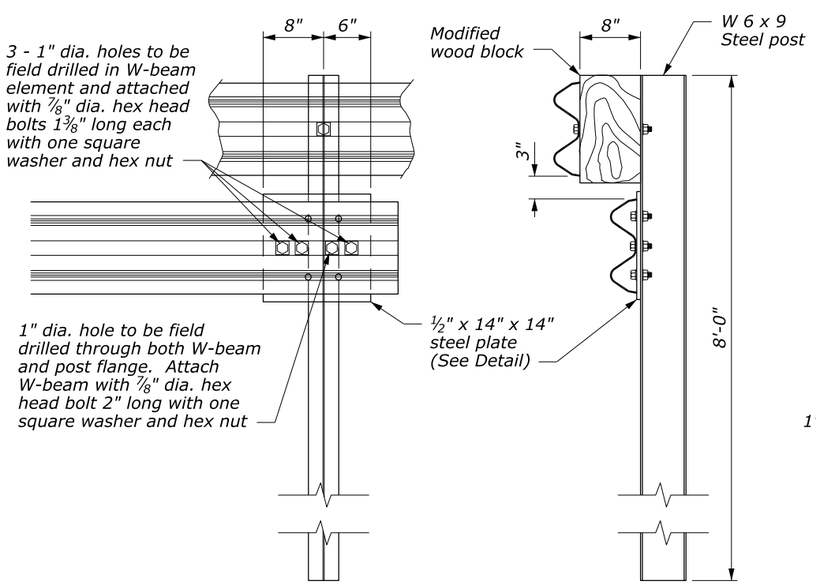

SPECIAL RUBRAIL TO POST CONNECTION AT POST 2

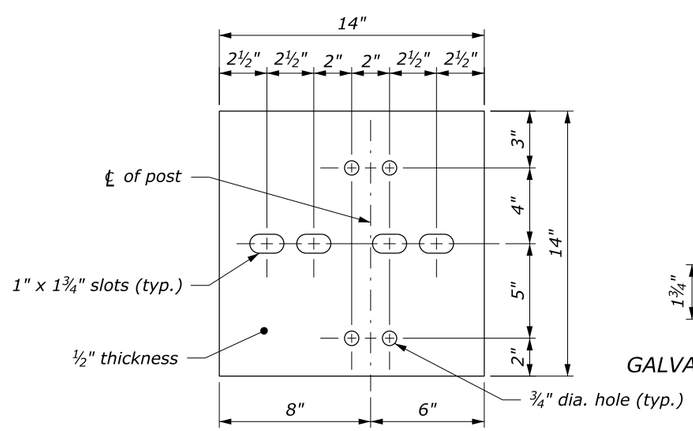

GALVANIZED STEEL PLATE

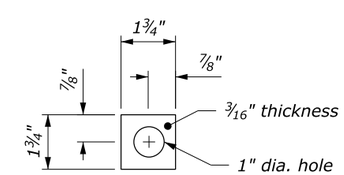

GALVANIZED SQUARE WASHER

STEEL PLATE AND WASHER

NO SCALE

U.S. DEPARTMENT OF TRANSPORTATION
FEDERAL HIGHWAY ADMINISTRATION
FEDERAL LANDS HIGHWAY

U.S. CUSTOMARY STANDARD

G4 W-BEAM GUARDRAIL BACK SLOPE ANCHOR TERMINAL TYPE G4-BAT

Sheet 2 of 2

STANDARD APPROVED FOR USE 1/1994

REVISED: 4/1994 6/2005
DRAFT: 5/2014

STANDARD 617-17

70% PLAN IN HAND 04-18-2017

c:\myfiles\pw_production\d0290749\wa-a2013020re-Std.617-17.dgn [USC]

1 October 2014 2:09 PM

STATE	PROJECT	SHEET NUMBER
WA	JEFF 91420(1)	I.7

NOTE:

1. *Use details shown as a general guide since manufacturer's details may vary. Install a tangent G4 W-beam guardrail terminal that meets NCHRP-350 or MASH requirements per manufacturer's recommendations. Ensure that terminal meets appropriate test level for the project.*
2. *Install terminal at a 1:25 taper or flatter, to position the end farther away from the edge of the shoulder, or use a taper per manufacturer's recommendations.*
3. *See manufacturer's drawings for other details.*

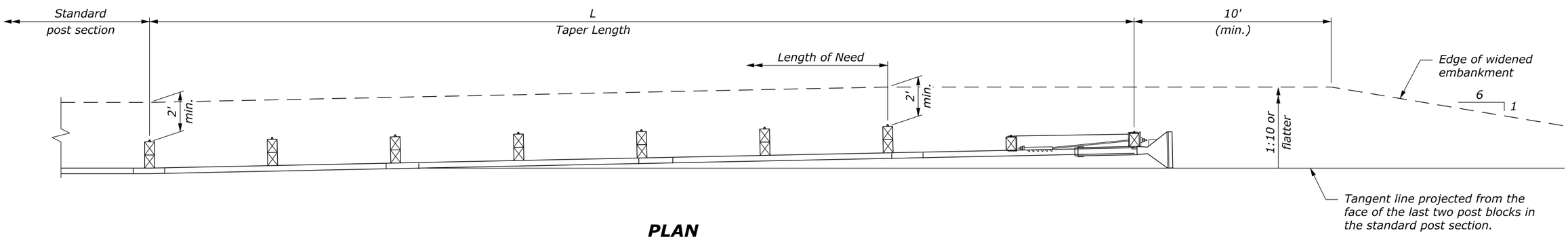

PLAN

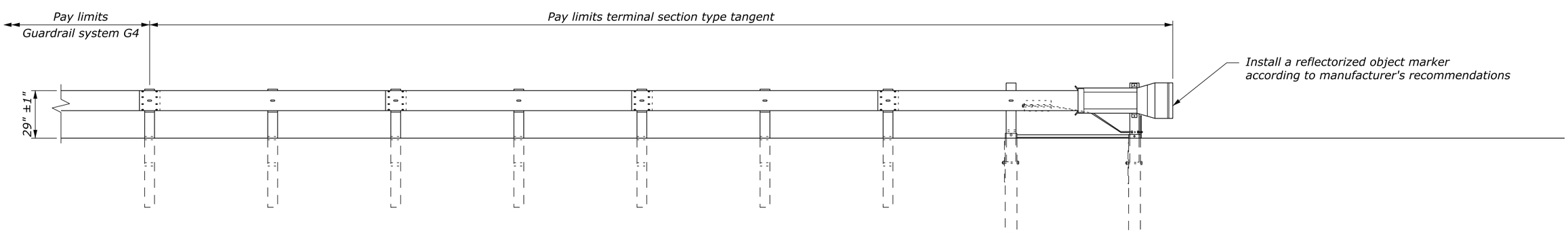

ELEVATION

TEST LEVEL	L (ft)
2 (≤ 45 mph)	25
3 (> 45 mph)	37.5 or 50

NO SCALE

U.S. DEPARTMENT OF TRANSPORTATION
FEDERAL HIGHWAY ADMINISTRATION
FEDERAL LANDS HIGHWAY

U.S. CUSTOMARY STANDARD

G4 W-BEAM GUARDRAIL TYPE TANGENT TERMINAL

STANDARD APPROVED FOR USE 6/2005

REVISED:
DRAFT: 3/2016

STANDARD 617-20

70% PLAN IN HAND 04-18-2017

19 January 2017 3:47 PM c:\myfiles\pw_production\d0290749\wa-a2013020rf-Std617-20.dgn [USC]

STATE	PROJECT	SHEET NUMBER
WA	JEFF 91420(1)	J.1

SPECIAL ROCK EMBANKMENT, MECHANICALLY PLACED QUANTITIES

See sheet J.2 for details

LOCATION	ITEM 20401-0000 ROADWAY EXCAVATION (CUYD)	ITEM 20702-0100 GEOTEXTILE FILTER, CLASS, TYPE 1A (SQYD)	ITEM 25201-1000 SPECIAL ROCK EMBANKMENT, MECHANICALLY PLACED (CUYD)	REMARKS
47+84.15 TO 48+50	148	144	161	MP 4

25210-0000 ROCKERY

See sheet J.3-4 for details

LOCATION	QUANTITY (SQYD)	FOR INFORMATION ONLY - NOT MEASURED FOR PAYMENT							REMARK
		STRUCTURAL EXCAVATION (CUYD)	GEOTEXTILE FILTER, CLASS1, TYPE A (SQYD)	CONSERVED EXCAVATION (CUYD)	BED COURSE (CUYD)	TOPSOIL (CUYD)	ROCK (CUYD)	UNDERDRAIN (LNFT)	
73+77 to 74+70	96	456	96	319	7	5	154	110	TOWER CREEK

TABULATION OF ROCKERY AND SPECIAL ROCK EMBANKMENT QUANTITIES

70% PLAN IN HAND 04-18-2017

Designed by: C. Conrad 10/2016 Checked by: --/---

30 January 2017 8:04 AM c:\myfiles\pw_production\d0314391\wa-a20130208a.dgn [US_Sur_ft2D]

STATE	PROJECT	SHEET NUMBER
WA	JEFF 91420(1)	J.2

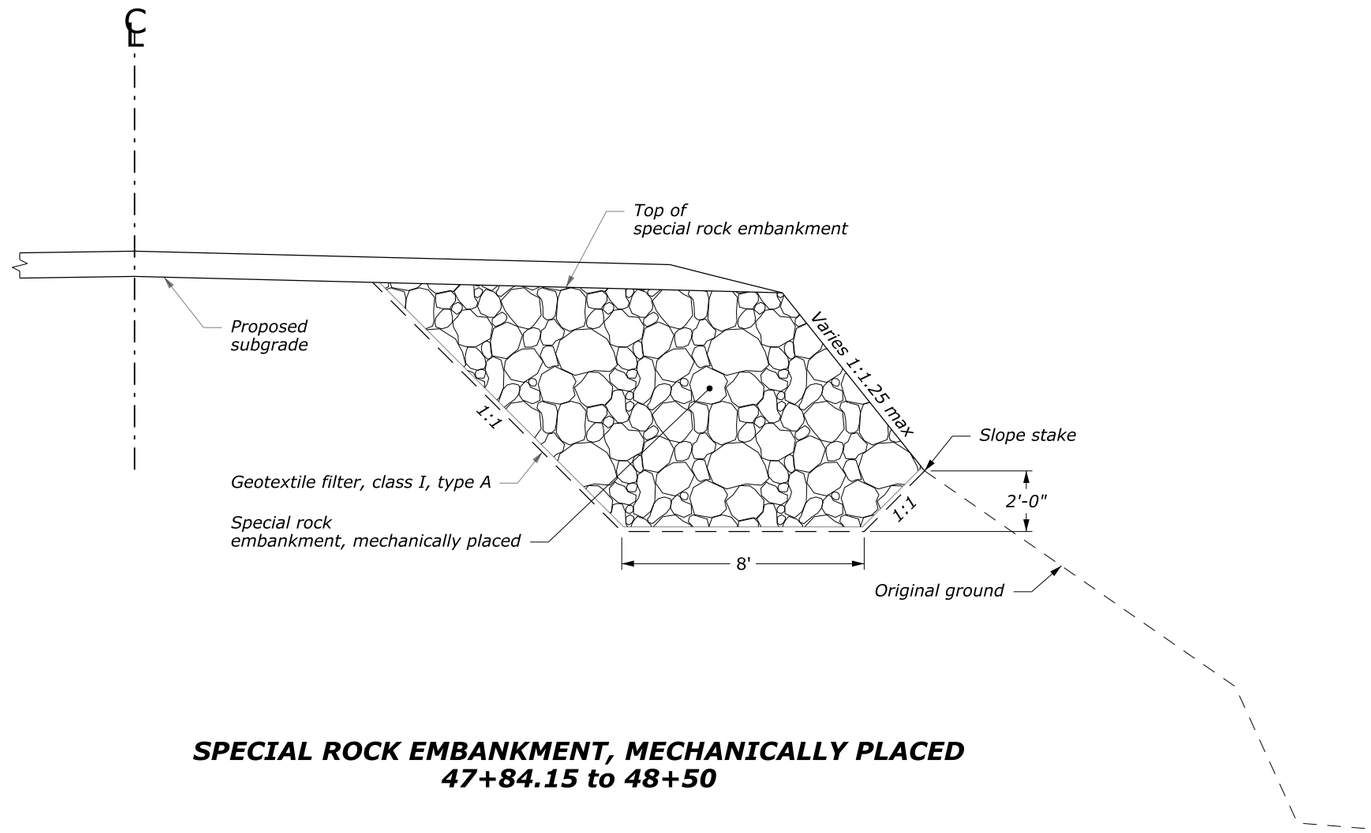

SPECIAL ROCK EMBANKMENT, MECHANICALLY PLACED
47+84.15 to 48+50

SPECIAL ROCK EMBANKMENT MECHANICALLY PLACED

70% PLAN IN HAND 04-18-2017

Designed by: C. Conrad | 01/2017 | Checked by: --/---

30 January 2017 6:21 AM c:\myfiles\pw_production\d0314391\wa-a2013020sa.dgn [US_Sur_ft2D]

STATE	PROJECT	SHEET NUMBER
WA	JEFF 91420(1)	J.3

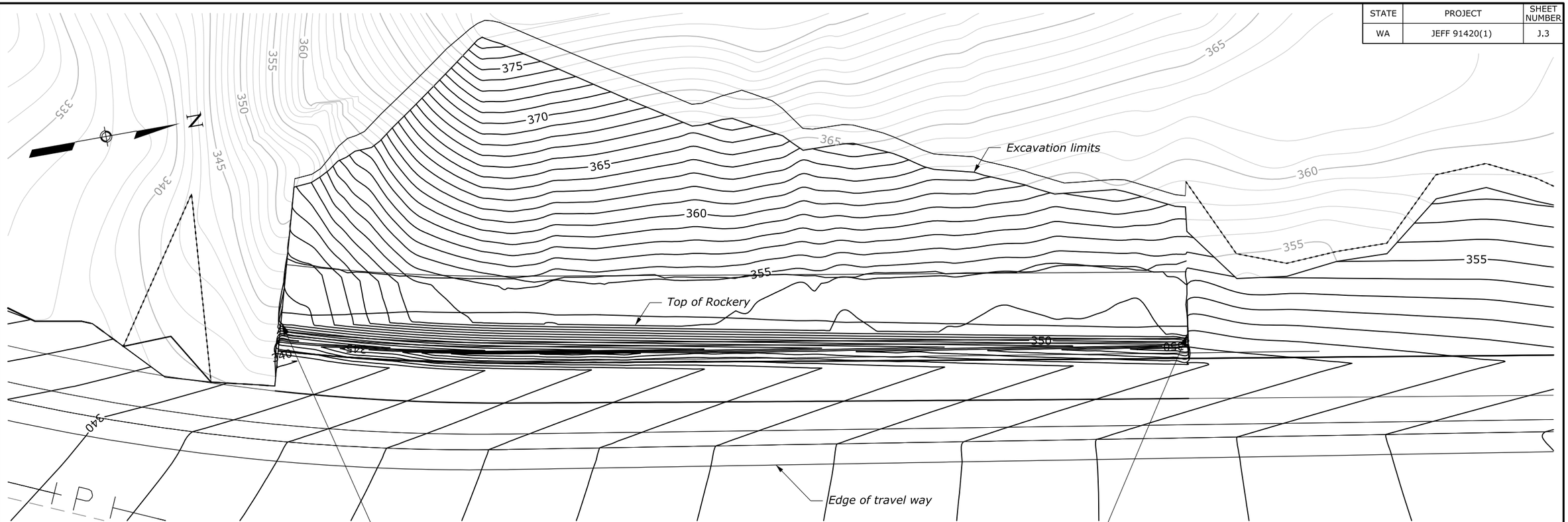

BEGIN ROCKERY WALL
73+77 (MAIN)
300+00 (ROCKERY)

END ROCKERY WALL
74+70 (MAIN)
300+90.32 (ROCKERY)

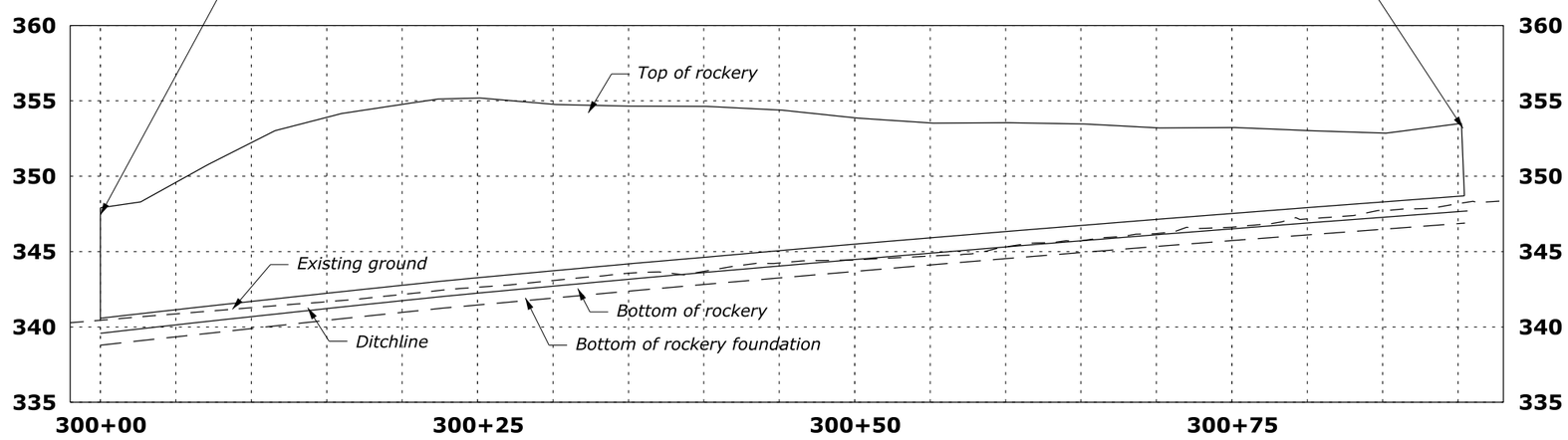

ROCKERY WALL
73+77 to 74+70

70% PLAN IN HAND 04-18-2017

Designed by: C. Conrad | 12/2016 | Checked by: --/---

30 January 2017 7:13 AM c:\mywfiles\pw_production\d0314391\wa-a2013020sb.dgn [US_Sur_ft2D]

STATE	PROJECT	SHEET NUMBER
WA	JEFF 91420(1)	J.4

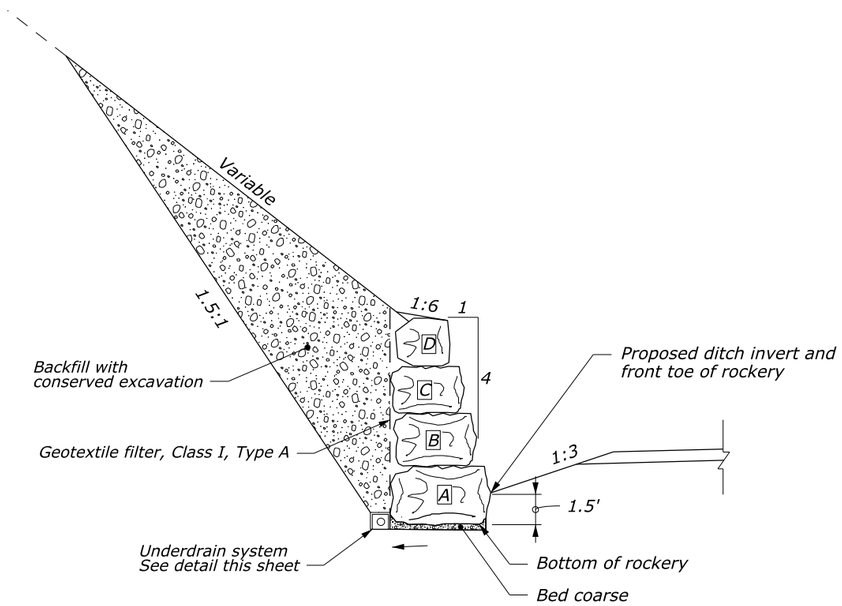

ROCKERY TYPICAL SECTION

STONE SIZE DESIGNATION						
WALL HEIGHT (H)	A	B	C	D	E	F
0 ft < H < 6 ft	4	3	2			
6 ft < H < 10 ft	5	4	3	2		
H > 10 ft	6	5	4	3	2	1

Number in table is equal to stone class.

STONE SIZE		
STONE CLASS	STONE MASS	AVERAGE DIMENSION
1	50 - 200 lb	12 to 18 inches
2	200 - 650 lb	18 to 30 inches
3	650 - 2,000 lb	30 to 36 inches
4	2,000 - 4,000 lb	36 to 48 inches
5	4,000 - 6,000 lb	48 to 54 inches
6	6,000 - 8,000 lb	54 to 60 inches

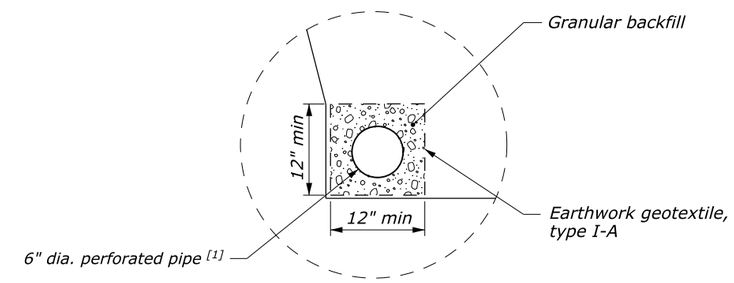

TYPICAL SECTION
UNDERDRAIN SYSTEM

UNDERDRAIN SYSTEM APPLICATION RATES (FOR INFO ONLY)	
Granular backfill (CUYD/LNFT)	Earthwork geotextile, type I-A (SQYD/LNFT)
0.03	0.55

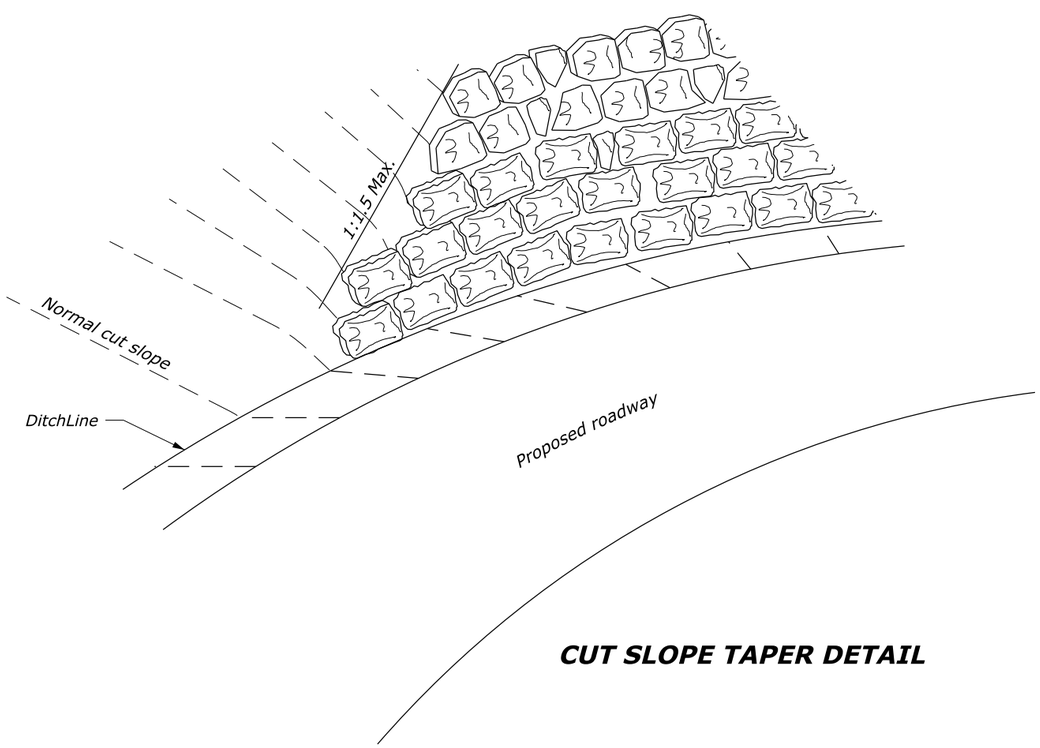

CUT SLOPE TAPER DETAIL

NOTE:

1. Place larger stones (size 4-6) with longest axis perpendicular to wall.
2. Bear each larger stone (size 4-6) firmly on at least two stones beneath it. Use smaller stones as needed to maintain spacing and eliminate gaps over 6". Cutting or dressing of stones is not required.

FOOTNOTE:

[1] Install underdrain at 0.5% minimum grade. Daylight to ditch beyond wall.

ROCKERY WALL DETAILS

70% PLAN IN HAND 04-18-2017

Designed by: C. Conrad | Checked by: 01/2017 | --/---
30 January 2017 7:22 AM c:\myfiles\pw_production\d0314391\wa=a20130208c.dgn [US_Sur_ft2D]

STATE	PROJECT	SHEET NUMBER
WA	JEFF 91420(1)	K.1

TEMPORARY TRAFFIC CONTROL QUANTITIES

ITEM NUMBER	DESCRIPTION	UNIT	QUANTITY
30110-0000	AGGREGATE SURFACE COURSE	TON	185 [1]
63502-0600	TEMPORARY TRAFFIC CONTROL, BARRICADE TYPE 3	EACH	12
63502-1000	TEMPORARY TRAFFIC CONTROL, CONE, TYPE 36-INCH	EACH	107
63502-1300	TEMPORARY TRAFFIC CONTROL, DRUM	EACH	12
63502-1600	TEMPORARY TRAFFIC CONTROL, WARNING LIGHT TYPE B	EACH	12
63502-2000	TEMPORARY TRAFFIC CONTROL, PORTABLE CHANGEABLE MESSAGE SIGN	EACH	2
63502-2100	TEMPORARY TRAFFIC CONTROL, CRASH CUSHION	EACH	6
63502-3100	TEMPORARY TRAFFIC CONTROL, TRAFFIC SIGNAL SYSTEM	EACH	3
63503-0400	TEMPORARY TRAFFIC CONTROL, CONCRETE BARRIER	LNFT	5,990
63504-2000	TEMPORARY TRAFFIC CONTROL, PAVEMENT MARKINGS, SYMBOLS AND LETTERS (STOP LINE)	SQFT	144
63506-0600	TEMPORARY TRAFFIC CONTROL, PILOT CAR	HR	3,300
63507-0700	TEMPORARY TRAFFIC CONTROL, TRAFFIC CONTROL SUPERVISOR	DAY	400
63509-1000	TEMPORARY TRAFFIC CONTROL, FLAGGER	FIX HR RATE	6,600

ITEM 63504-1000 TEMPORARY TRAFFIC CONTROL, CONSTRUCTION SIGN

MUTCD NUMBER	LEGEND	SIZE (IN x IN)	NUMBER OF SIGNS	QUANTITY (SQFT)
G20-1	ROAD WORK NEXT 7 MILES	36 x 18	2	9
W20-1	ROAD WORK 700 FT	36 x 36	2	18
W20-1	ROAD WORK 350 FT	36 x 36	2	18
W20-1	ROAD WORK AHEAD	36 x 36	1	9
W13-1P	25 MPH	24 x 24	2	8
G20-2	END ROAD WORK	36 x 18	2	9
W24-1L	Double Reverse Curve (1 LANE)	36 x 36	3	27
W24-1R	Double Reverse Curve (1 LANE)	36 x 36	3	27
W3-4	BE PREPARED TO STOP	36 x 36	6	54
W20-7	Flagger symbol	36 x 36	6	54
W16-2p	350 FEET	24 x 18	6	18
W20-4	ONE LANE ROAD AHEAD	36 x 36	6	54
W13-1P	25 MPH	36 x 36	6	54
W3-3	Signal ahead symbol	36 x 36	6	54
R10-6	STOP HERE ON RED	24 x 36	6	36
			TOTAL	449

FOOTNOTE:

[1] For temporary widening at Canyon Creek. See detail Sheet K._

TABULATION OF TEMPORARY TRAFFIC CONTROL QUANTITIES

70% PLAN IN HAND 04-18-2017

Designed by: --/--- Checked by: --/--- c:\myfiles\pw_production\d0290747\wa=a2013020_na.dgn [US_Sur_ft2D] 13 April 2017 4:53 PM

STATE	PROJECT	SHEET NUMBER
WA	JEFF 91420(1)	K.2

SIGN SPACING TABLE			
ROAD TYPE	DISTANCE BETWEEN SIGNS IN FEET		
	A	B	C
Urban and Rural 30 MPH and less	100	100	100
Urban and Rural 35 MPH to 50 MPH	350	350	350
Rural greater than 50 MPH	500	500	500
Expressway / Freeway	1000	1500	2640

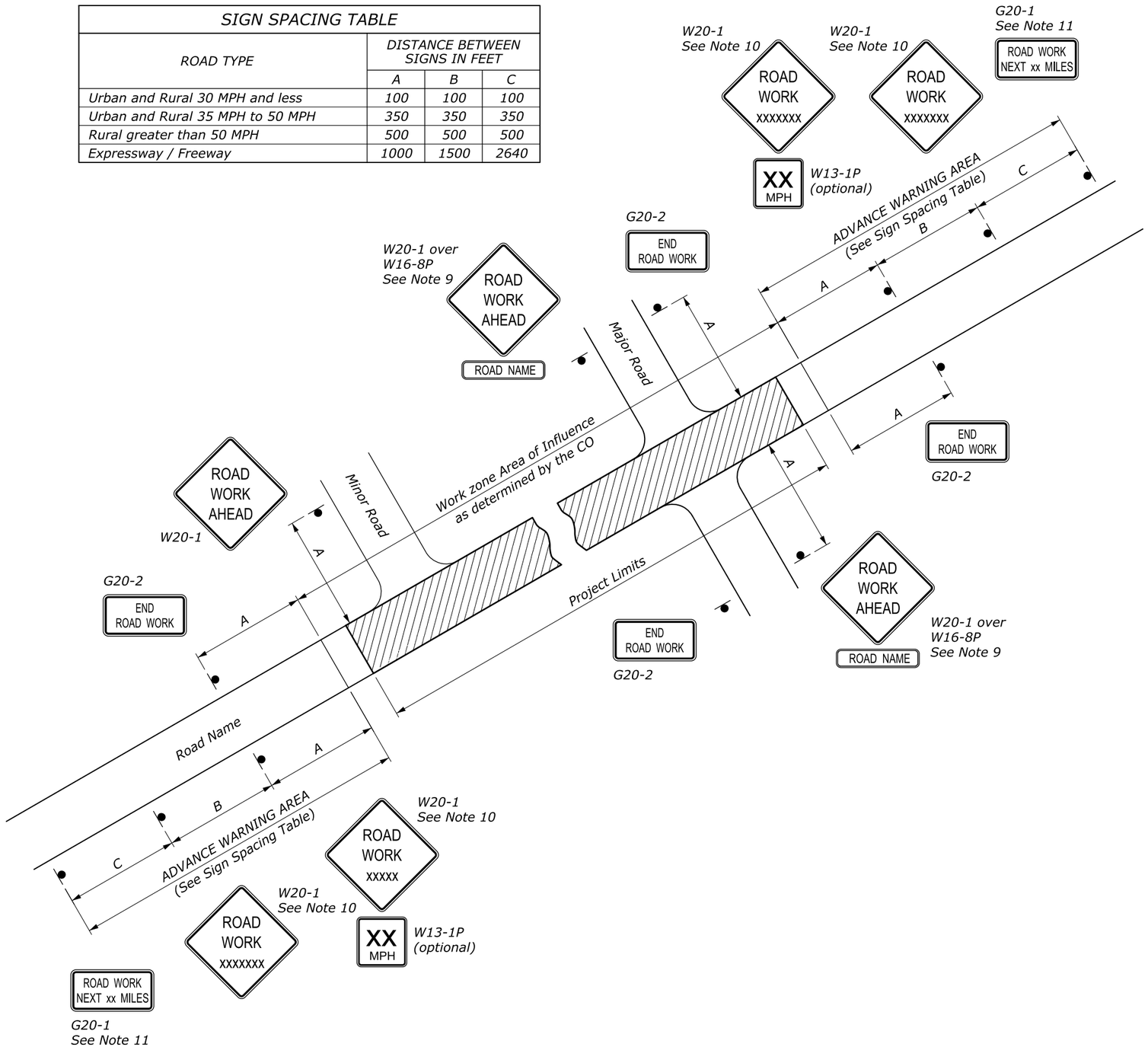

NOTE:

1. Erect all project advance warning signs before starting construction work.
2. Not all details shown on the temporary traffic control sheets may be applicable to this project. The Contractor may add or delete information and details in this traffic control plan as necessary to accommodate actual operations.
3. Where advance warning signs, placed as shown, interfere with permanent signs, locate the warning signs as determined by the CO for best results. Vary messages as required.
4. Additional or different message signs may be required to fit the actual construction conditions.
5. Install advisory speed plates under the W20 series warning signs as needed to indicate a maximum recommended speed through the construction area.
6. Ensure all sign supports exposed to impact by traffic meet the requirements of NCHRP-350 or MASH for crashworthiness.
7. Maintain two-way traffic during all non-work hours except as approved by the CO.
8. Do not store traffic control devices along the roadway when not in use. Cover post-mounted signs when not applicable.
9. If W20-1 is placed on a roadway other than that on which the actual construction work occurs, include a supplementary plaque indicating the name of the road on which the construction does occur (applies to major roads only).
10. The message on the W20-1 signs may be "ROAD WORK AHEAD" or may specify the distance to the work area in feet or in miles. Install an additional W20-1 sign when approach speeds exceed 50 MPH. When used place the two W20-1 signs "B" feet apart according to the Sign Spacing Table.
11. For work zones that are 2 miles or more in length, install G20-1 signs at each end of the project. Show the distance on the G20-1 sign to the nearest whole mile.
12. If signing on a roadway under a jurisdiction other than the client agency, verify that an encroachment permit has been obtained.
13. State standards may be used as an alternative if approved by the CO.
14. Refer to the Section 635 of the Special Contract Requirements for allowable retroreflective sheeting types.

NO SCALE

U.S. DEPARTMENT OF TRANSPORTATION
FEDERAL HIGHWAY ADMINISTRATION
FEDERAL LANDS HIGHWAY

U.S. CUSTOMARY STANDARD

TEMPORARY TRAFFIC CONTROL ADVANCE SIGNING

STANDARD APPROVED FOR USE 6/2005

REVISED:
DRAFT: 6/2014

STANDARD
635-1

70% PLAN IN HAND 04-18-2017

31 January 2017 10:06 AM c:\myfiles\pw_production\d0290747\wa-a2013020_nb.dgn [USC]

STATE	PROJECT	SHEET NUMBER
WA	JEFF 91420(1)	K.3

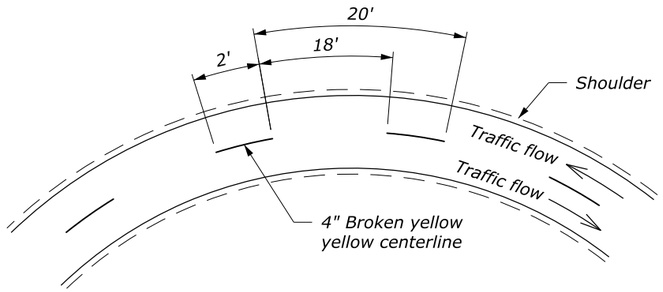

DETAIL A1
Passing zone both directions
Two-way traffic

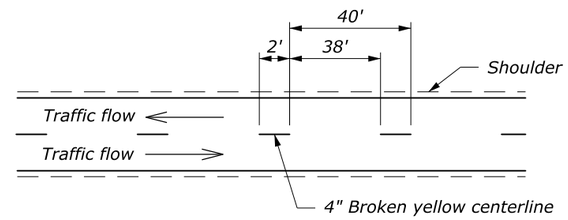

DETAIL B1
Passing zone both directions
Two-way traffic

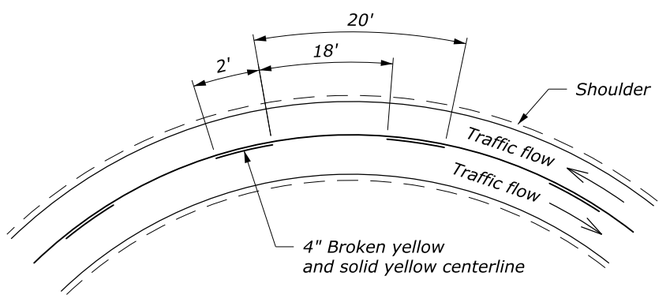

DETAIL A2
No passing zone one direction
Two-way traffic

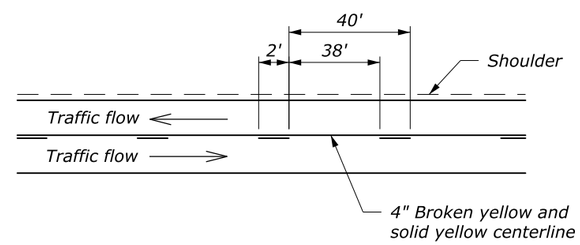

DETAIL B2
No Passing zone one direction
Two-way traffic

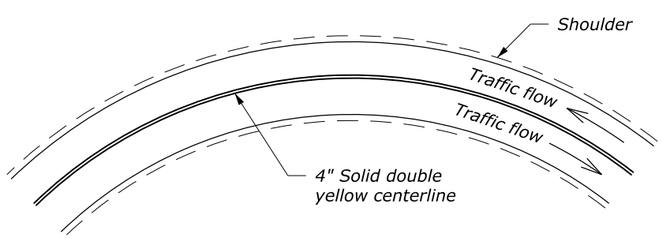

DETAIL A3
No passing zone both directions
Two-way traffic

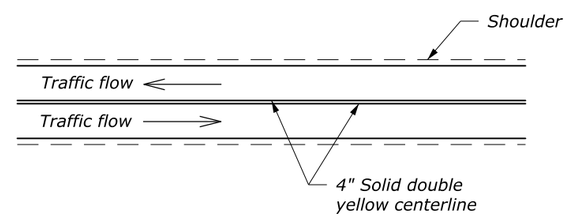

DETAIL B3
No Passing zone both directions
Two-way traffic

DETAIL A
Curves < 500' Radius

DETAIL B
Tangents or Curves ≥ 500' Radius

NOTE:

1. *To substitute raised pavement markers for lines, use the following patterns:*

   2' broken line: two pavement markers spaced 2' apart allowed by the gap shown based on curvature.

   Single solid line: pavement markers spaced on 10' centers.

   Double solid line: two pavement markers, side by side, spaced on 10' centers.

2. *On two- or three-lane roads, signs may be used instead of temporary pavement markings as shown on Standard 635-3.*

U.S. DEPARTMENT OF TRANSPORTATION
FEDERAL HIGHWAY ADMINISTRATION
FEDERAL LANDS HIGHWAY

U.S. CUSTOMARY STANDARD

TEMPORARY PAVEMENT MARKINGS

STANDARD APPROVED FOR USE 6/2005
REVISED:
DRAFT: 9/2016

STANDARD
635-2

70% PLAN IN HAND 04-18-2017

31 January 2017 10:13 AM c:\myfiles\pw_production\d0290747\wa-a2013020_nc.dgn [USC]

STATE	PROJECT	SHEET NUMBER
WA	JEFF 91420(1)	K.4

LENGTH AND SPACING TABLE				
APPROACH SPEED*	BUFFER SPACE LENGTH	CHANNELIZING DEVICE		
		TAPER AREA	BUFFER SPACE	WORK SPACE
MPH	FEET	SPACING IN FEET		
20	115	20	40	40
25	155	20-25	50	50
30	200	20-30	60	60
35	250	20-35	70	70
40	305	20-40	80	80
45	360	20-45	90	90
50	425	20-50	100	100
55	495	20-55	110	110
60	570	20-60	120	120
65	645	20-65	130	130
70	730	20-70	140	140

* Approach speed based on the regulatory posted speed, not the advisory speed.

SIGN SPACING TABLE			
ROAD TYPE	DISTANCE BETWEEN SIGNS IN FEET		
	A	B	C
Urban and Rural 30 MPH and less	100	100	100
Urban and Rural 35 MPH to 50 MPH	350	350	350
Rural greater than 50 MPH	500	500	500
Expressway / Freeway	1000	1500	2640

NOTE:

1. Signs are shown for one direction of travel only. Place devices similar to those depicted for the opposite direction of travel.
2. If the area approaching diversion is not already signed and marked as a no passing zone, add signing and/or marking as appropriate. Remove conflicting pavement markings.
3. If the tangent distance along the temporary diversion is more than 600', use an appropriate "Reverse Curve" sign (W1-4) instead of the "Double Reverse Curve" sign (W24-1). Install a second, appropriate "Reverse Curve" sign (W1-4) in advance of the second reverse curve back to the original alignment. Use "Reverse Turn" signs (W1-3) instead when the diversion has sharp curves with recommended speeds of 30 mph or less.
4. If the diversion is completely within the project limits, eliminate the "ROAD WORK AHEAD" (W20-1) and "END ROAD WORK" (G20-2) signs.
5. Place channelizing devices outside temporary roadway.
6. Do not allow equipment, materials, or vehicles to be parked or stored in the buffer space.

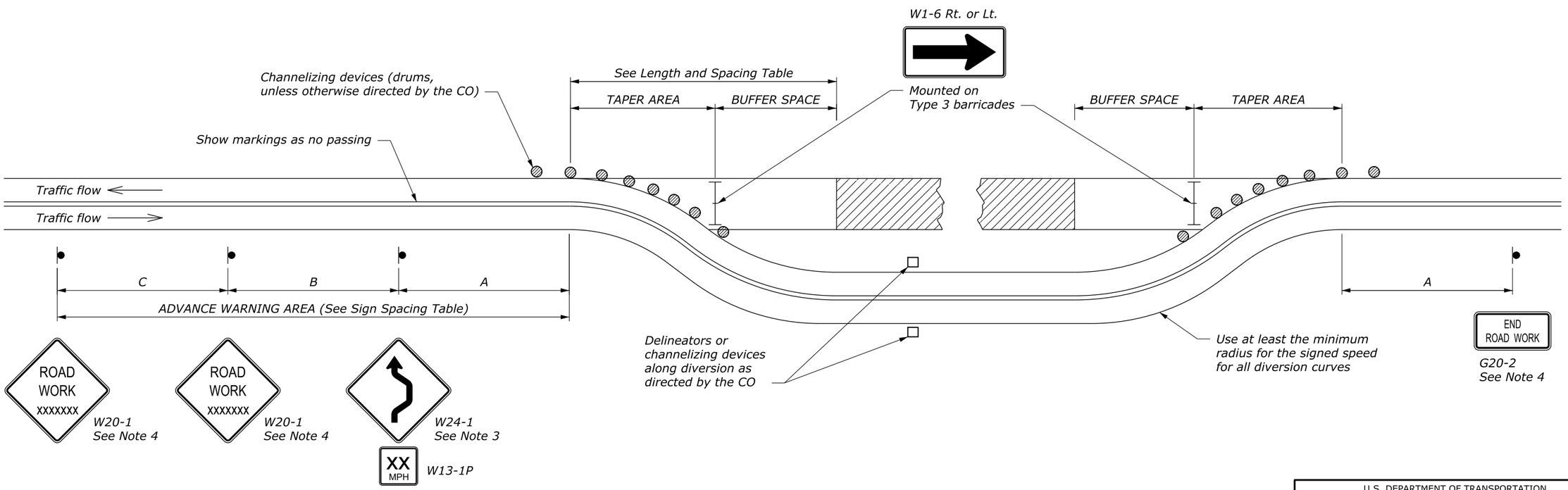

NO SCALE

U.S. DEPARTMENT OF TRANSPORTATION
FEDERAL HIGHWAY ADMINISTRATION
FEDERAL LANDS HIGHWAY

U.S. CUSTOMARY STANDARD

TEMPORARY TRAFFIC CONTROL FOR DIVERSION

STANDARD APPROVED FOR USE 6/2005

REVISED:
DRAFT: 6/2015

STANDARD
635-4

70% PLAN IN HAND 04-18-2017

31 January 2017 10:13 AM c:\myfiles\pw_production\d0290747\wa-a2013020_nd.dgn [USC]

STATE	PROJECT	SHEET NUMBER
WA	JEFF 91420(1)	K.5

LENGTH AND SPACING TABLE	
APPROACH SPEED*	BUFFER SPACE LENGTH
MPH	FEET
20	115
25	155
30	200
35	250
40	305
45	360
50	425
55	495
60	570
65	645
70	730

* Approach speed based on the regulatory posted speed, not the advisory speed.

SIGN SPACING TABLE			
ROAD TYPE	DISTANCE BETWEEN SIGNS IN FEET		
	A	B	C
Urban and Rural 30 MPH and less	100	100	100
Urban and Rural 35 MPH to 50 MPH	350	350	350
Rural greater than 50 MPH	500	500	500
Expressway / Freeway	1000	1500	2640

NOTE:

1. Signs are shown for one direction of travel only. Place devices similar to those depicted for the opposite direction of travel.
2. Final location and spacing of signs and devices may be changed to fit field conditions as approved by the CO.
3. For pilot car operation, mount the "PILOT CAR FOLLOW ME" (G20-4) sign at a conspicuous location on the rear of vehicle. Prominently display the name of the Contractor on the pilot car.
4. If closure is completely within the project limits, eliminate the "ROAD WORK AHEAD" (W20-1) and "END ROAD WORK" (G20-2) signs.
5. For night time flagging operation, provide floodlighting at flagger stations.
6. Do not allow equipment, materials, or vehicles to be parked or stored in the buffer space.

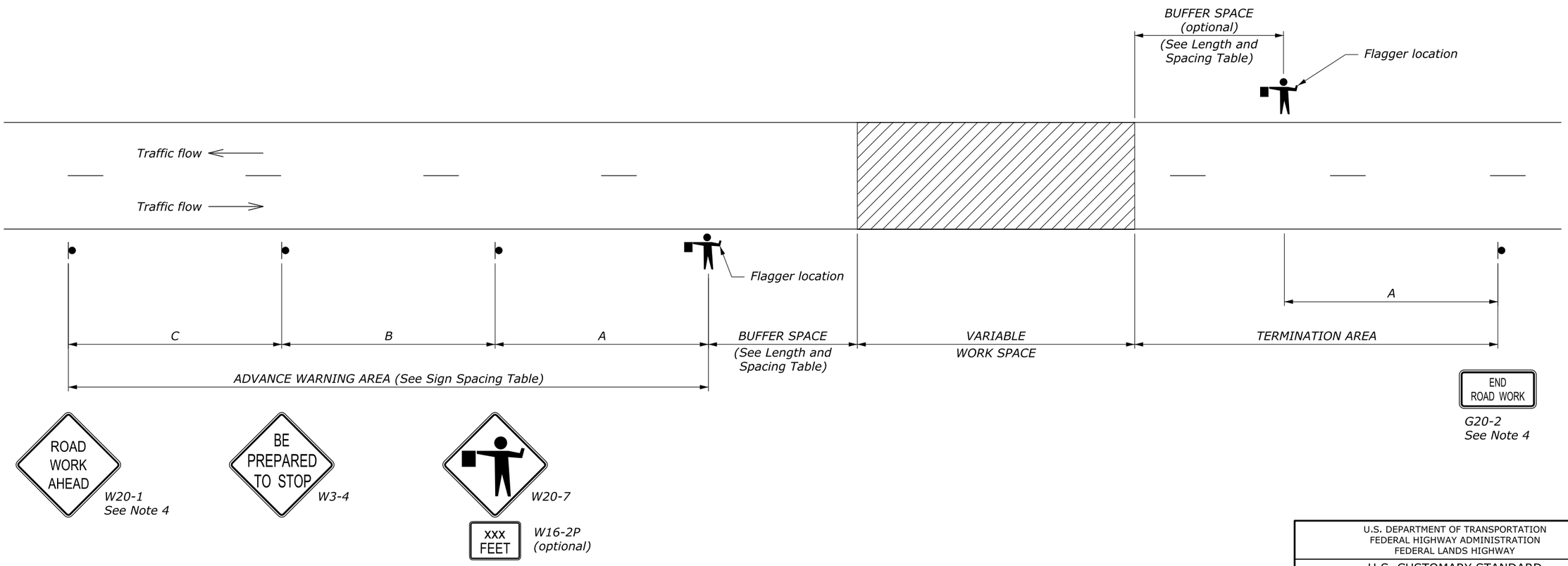

NO SCALE

U.S. DEPARTMENT OF TRANSPORTATION
FEDERAL HIGHWAY ADMINISTRATION
FEDERAL LANDS HIGHWAY

U.S. CUSTOMARY STANDARD

TEMPORARY TRAFFIC CONTROL ROAD CLOSURE LAYOUT (WITH FLAGGERS)

STANDARD APPROVED FOR USE 6/2005

REVISED:
DRAFT: 8/2013

STANDARD
635-5

70% PLAN IN HAND 04-18-2017

31 January 2017 10:15 AM c:\myfiles\pw_production\d0290747\wa-a2013020_ne.dgn [USC]

STATE	PROJECT	SHEET NUMBER
WA	JEFF 91420(1)	K.6

LENGTH AND SPACING TABLE				
APPROACH SPEED*	BUFFER SPACE LENGTH	CHANNELIZING DEVICE		
		TAPER AREA	BUFFER SPACE	WORK SPACE
MPH	FEET	SPACING IN FEET		
20	115	20	40	40
25	155	20	50	50
30	200	20	60	60
35	250	20	70	70
40	305	20	80	80
45	360	20	90	90
50	425	20	100	100
55	495	20	110	110
60	570	20	120	120
65	645	20	130	130
70	730	20	140	140

* Approach speed based on the regulatory posted speed, not the advisory speed.

SIGN SPACING TABLE			
ROAD TYPE	DISTANCE BETWEEN SIGNS IN FEET		
	A	B	C
Urban and Rural 30 MPH and less	100	100	100
Urban and Rural 35 MPH to 50 MPH	350	350	350
Rural greater than 50 MPH	500	500	500
Expressway / Freeway	1000	1500	2640

NOTE:

1. Signs are shown for one direction of travel only. Place devices similar to those depicted for the opposite direction of travel.
2. Final location and spacing of signs and devices may be changed to fit field conditions as approved by the CO.
3. For pilot car operation, mount the PILOT CAR FOLLOW ME (G20-4) sign at a conspicuous location on the rear of vehicle. Prominently display the name of the contractor on the pilot car.
4. If closure is completely within the project limits, eliminate the "ROAD WORK AHEAD" (W20-1) and "END ROAD WORK" (G20-2) signs.
5. For night time flagging operation, provide floodlighting at flagger stations.
6. For project specific minimum width, refer to the Special Contract Requirements, Section 156.
7. Do not allow equipment, materials, or vehicles to be parked or stored in the buffer space.

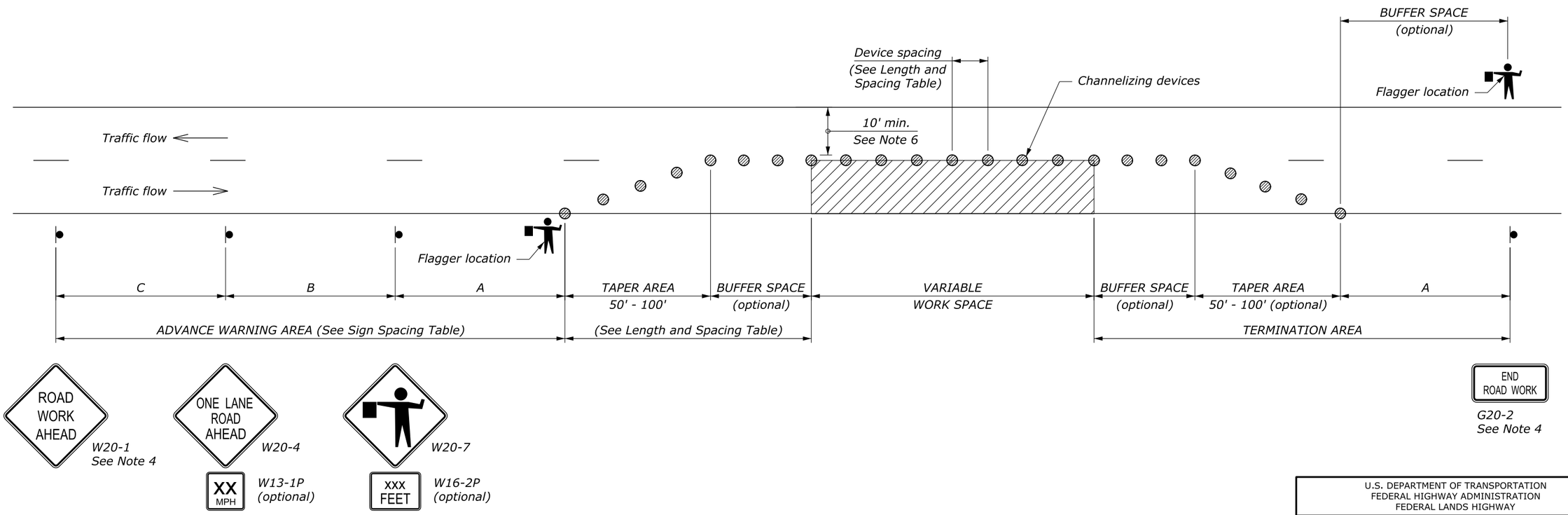

NO SCALE

U.S. DEPARTMENT OF TRANSPORTATION
FEDERAL HIGHWAY ADMINISTRATION
FEDERAL LANDS HIGHWAY

U.S. CUSTOMARY STANDARD

TEMPORARY TRAFFIC CONTROL SINGLE LANE CLOSURE LAYOUT (WITH FLAGGERS)

STANDARD APPROVED FOR USE 6/2005

REVISED:
DRAFT: 8/2013

STANDARD
635-6

70% PLAN IN HAND 04-18-2017

31 January 2017 10:16 AM c:\myfiles\pw_production\d0290747\wa-a2013020_nf.dgn [USC]

STATE	PROJECT	SHEET NUMBER
WA	JEFF 91420(1)	K.7

LENGTH AND SPACING TABLE				
APPROACH SPEED*	BUFFER SPACE LENGTH	CHANNELIZING DEVICE		
		TAPER AREA	BUFFER SPACE	WORK SPACE
MPH	FEET	SPACING IN FEET		
20	115	20	40	40
25	155	20	50	50
30	200	20	60	60
35	250	20	70	70
40	305	20	80	80
45	360	20	90	90
50	425	20	100	100
55	495	20	110	110
60	570	20	120	120
65	645	20	130	130
70	730	20	140	140

* Approach speed based on the regulatory posted speed, not the advisory speed.

SIGN SPACING TABLE			
ROAD TYPE	DISTANCE BETWEEN SIGNS IN FEET		
	A	B	C
Urban and Rural 30 MPH and less	100	100	100
Urban and Rural 35 MPH to 50 MPH	350	350	350
Rural greater than 50 MPH	500	500	500
Expressway / Freeway	1000	1500	2640

NOTE:

1. Signs are shown for one direction of travel only. Place devices similar to those depicted for the opposite direction of travel.
2. A single signal installation is acceptable, on the right-hand side of the road, if it has two signal faces that are at least 8 feet apart and meets the other requirements of Part 4 of the MUTCD.
3. Install and operate temporary traffic control signals in accordance with the provisions of the MUTCD, Part 4. Signal timing shall be established by a qualified engineer. When the signal is changed to the flashing mode either manually or automatically, ensure red signal indications are flashed to both approaches.
4. Final location and spacing of signs and devices may be changed to fit field conditions as approved by the CO. If signals are moved, revised signal timing must be determined by a qualified engineer.
5. For paved roadway surfaces, install stop lines complying with MUTCD Section 3B.16. Remove existing conflicting pavement markings and raised markers between the work space and the stop line. Add no-passing lines in advance of the stop line that comply with MUTCD Section 3B.02. Removeable pavement markings may be used for stop lines and no-passing pavement markings.
6. If closure is completely within the project limits, eliminate the "ROAD WORK AHEAD" (W20-1) and "END ROAD WORK" (G20-2) signs.
7. For project specific minimum width, refer to Special Contract Requirements, Section 156.
8. Do not allow equipment, materials, or vehicles to be parked or stored in the buffer space.

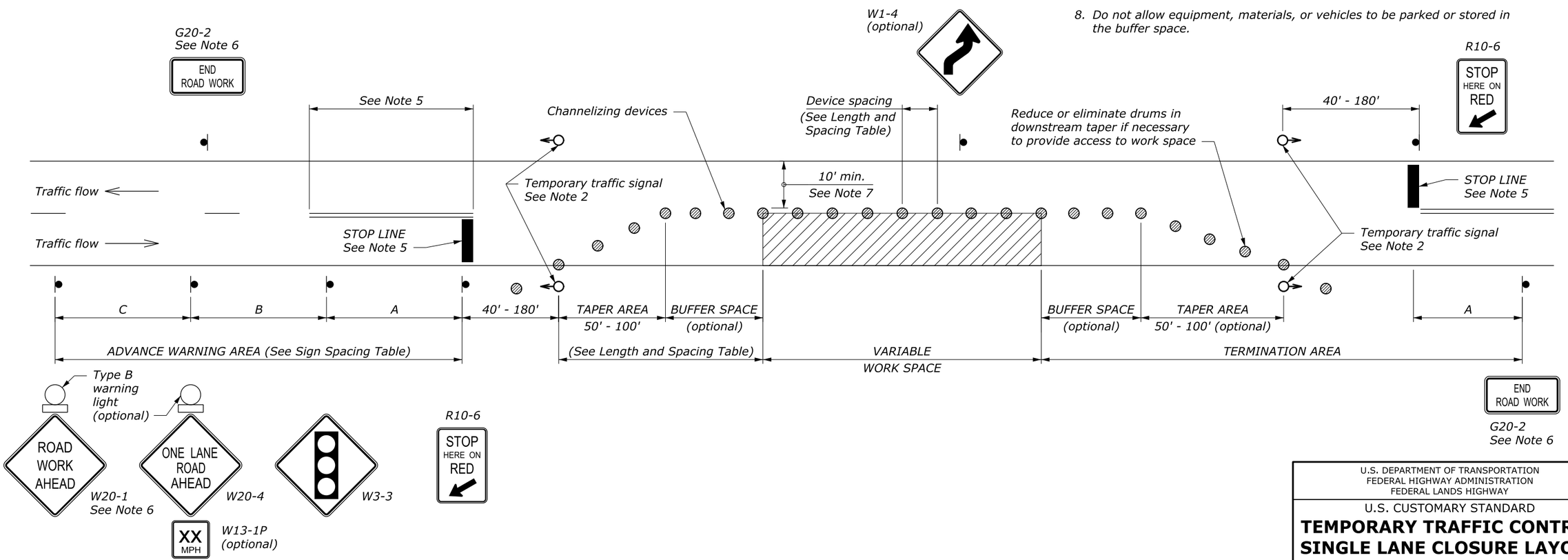

NO SCALE

U.S. DEPARTMENT OF TRANSPORTATION
FEDERAL HIGHWAY ADMINISTRATION
FEDERAL LANDS HIGHWAY

U.S. CUSTOMARY STANDARD

TEMPORARY TRAFFIC CONTROL SINGLE LANE CLOSURE LAYOUT (WITH SIGNALS)

STANDARD APPROVED FOR USE 6/2005

REVISED:
DRAFT: 9/2016

STANDARD
635-9

70% PLAN IN HAND 04-18-2017
24 February 2016 8:59 AM c:\myfiles\pw_production\d0243077\FLH-Cells.dgnlib [Border.US]

STATE	PROJECT	SHEET NUMBER
WA	JEFF 91420(1)	K.8

LENGTH AND SPACING TABLE

APPROACH SPEED* MPH	BUFFER SPACE LENGTH FEET	CHANNELIZING DEVICE SPACING IN FEET: TAPER AREA	BUFFER SPACE	WORK SPACE	CONCRETE BARRIER FLARE RATE	WORK ZONE CLEAR ZONE WIDTH FEET
20	115	20	40	40	1:8	10
25	155	20	50	50	1:8	10
30	200	20	60	60	1:8	10
35	250	20	70	70	1:9	10
40	305	20	80	80	1:10	15
45	360	20	90	90	1:12	20
50	425	20	100	100	1:14	20
55	495	20	110	110	1:16	20
60	570	20	120	120	1:16	30
65	645	20	130	130	1:16	30
70	730	20	140	140	1:16	30

* Approach speed based on the regulatory posted speed, not the advisory speed.

NOTE:

1. Install signs and other devices for single lane closure according to Standard 635-6, 7, 8, or 9. Final location and spacing of signs and devices may be changed to fit field conditions as approved by the CO.
2. Place barrier according to the AASHTO Roadside Design Guide. Terminate barrier ends outside the work zone clear zone or protect the barrier ends with a crash cushion. Include reflectors on barrier at 25' intervals.
3. For project specific minimum width, refer to Special Contract Requirements, Section 156.
4. Place channelizing devices at downstream taper during non-work hours or when access is not needed.
5. Do not allow equipment, materials, or vehicles to be parked or stored in the buffer space.
6. Reduce or eliminate drums and barrier in downstream taper if necessary to provide access to work space.

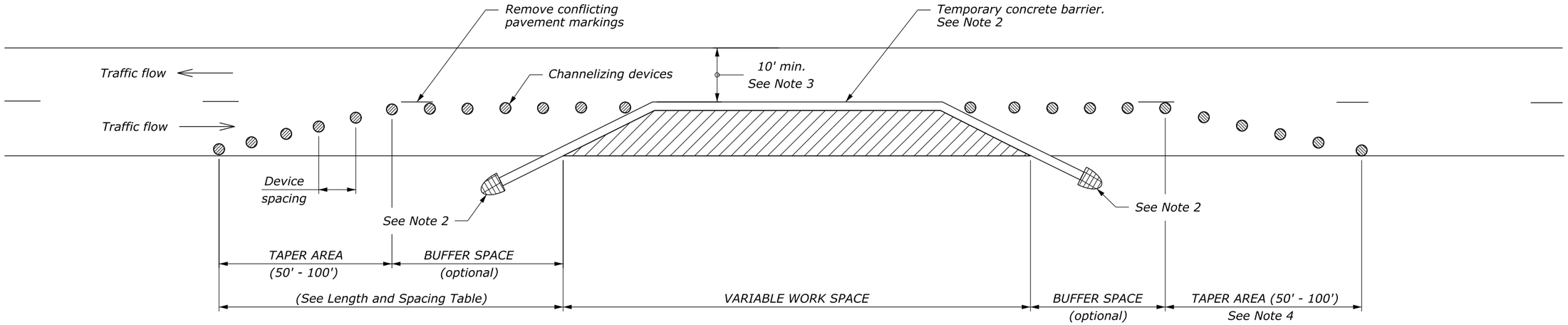

NO SCALE

U.S. DEPARTMENT OF TRANSPORTATION
FEDERAL HIGHWAY ADMINISTRATION
FEDERAL LANDS HIGHWAY

U.S. CUSTOMARY STANDARD

TEMPORARY TRAFFIC CONTROL SINGLE LANE CLOSURE LAYOUT (WITH TEMPORARY BARRIER)

STANDARD APPROVED FOR USE 6/2005

REVISED:
DRAFT: 6/2015

STANDARD 635-13

70% PLAN IN HAND 04-18-2017

31 January 2017 10:19 AM c:\myfiles\pw_production\d0290747\wa-a2013020_nh.dgn [USC]

STATE	PROJECT	SHEET NUMBER
WA	JEFF 91420(1)	K.9

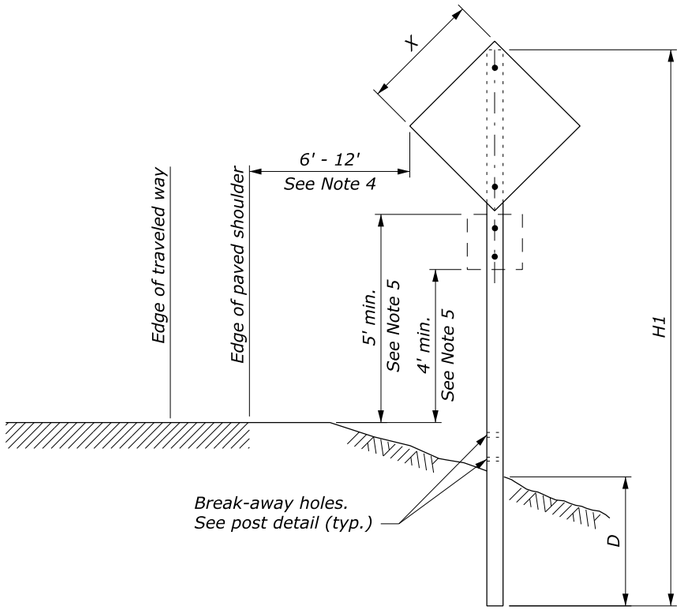

SINGLE POST SIGN

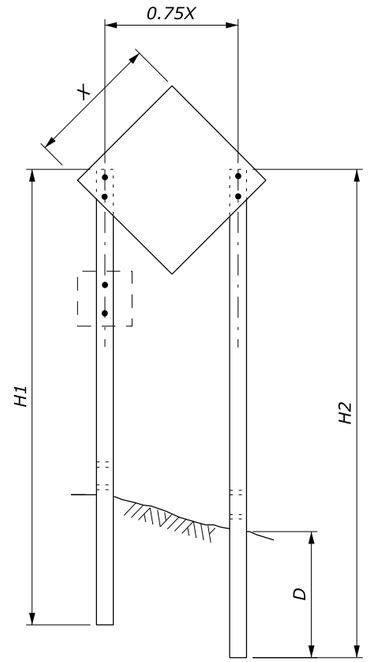

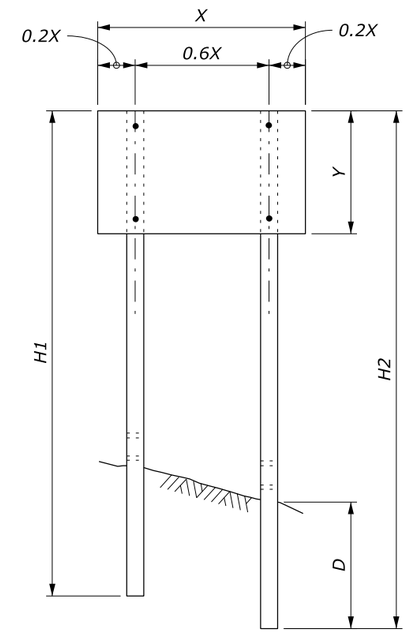

TWO POST SIGN

NOTE:

1. Attach sign panels with a minimum of 2 - ¼" dia. bolts per post.
2. H1 and H2 = Overall post length. Select post lengths to fit field conditions.
3. D = Post embedment depth for average soil conditions.
4. In areas where lateral distance is limited, a minimum lateral offset of 2' may be used. In areas with curbs, a minimum lateral distance of 1' behind the face of the curb may be used.
5. In pedestrian locations, or in areas with obstructed views, use 7' minimum mounting height for main sign and 6' minimum mounting height for secondary sign.
6. Use 7' minimum spacing between posts for sign posts 6" x 6" or larger.
7. State standards may be used as an alternative if approved by the CO.

WOOD POST SELECTION TABLE

WIDTH "X"	AREA (SQFT)	NUMBER OF POSTS	POST SIZE (INCH)	D (INCH)	HOLE SIZE (INCH)
Diamond ≤ 36" Other Shapes ≤ 48"	< 10	1	4 x 4	36	0
		1	4 x 6	48	1.5
Diamond ≤ 48"	10 - 20	1	6 x 6	48	2
Diamond ≤ 48" Other Shapes ≤ 12'	10 - 20	2	4 x 4	36	0
	20 - 50	2	4 x 6	48	1.5
> 13'	50 - 65	2	6 x 6	48	2
12' - 16'	50 - 65	3	4 x 6	48	1.5
> 17'	65 - 95	4	4 x 6	48	2
> 30'	65 - 95	3	6 x 6	48	2

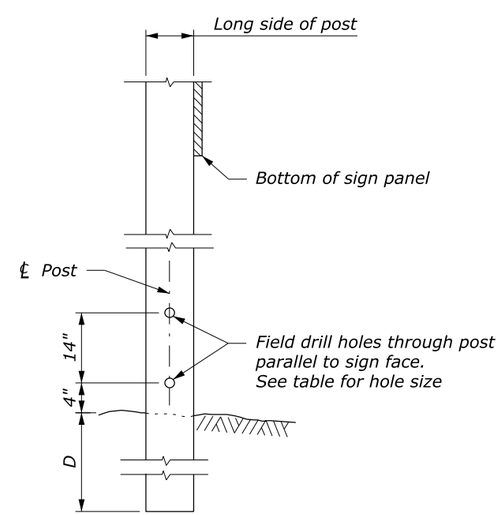

POST DETAIL

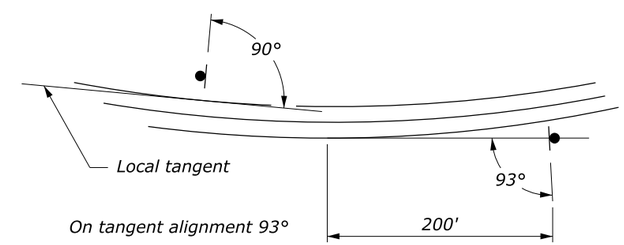

SIGN INSTALLATION ANGLE

NO SCALE

U.S. DEPARTMENT OF TRANSPORTATION
FEDERAL HIGHWAY ADMINISTRATION
FEDERAL LANDS HIGHWAY

U.S. CUSTOMARY STANDARD

TEMPORARY TRAFFIC CONTROL SIGN INSTALLATION WOOD POSTS

STANDARD APPROVED FOR USE 6/2005

REVISED:
DRAFT: 9/2014

STANDARD 635-14

70% PLAN IN HAND 04-18-2017

31 January 2017 10:21 AM c:\myfiles\pw_production\d0290747\wa-a20130020_ni.dgn [USC]

STATE	PROJECT	SHEET NUMBER
WA	JEFF 91420(1)	L.1

ITEM 63302-0000
SIGN SYSTEM

LOCATION	MUTCD NUMBER	LEGEND	SIZE (IN x IN)	NUMBER OF SIGNS	QUANTITY (SQFT)	REMARKS
73+71 RT	W11-10	TRUCK	30 x 30	1	6.25	TOWER CREEK
76+76 LT	OM3L	TYPE 3 OBJECT MARKER	12 x 36	1	3	
76+76 RT	OM3R	TYPE 3 OBJECT MARKER	12 x 36	1	3	
78+18 LT	OM3R	TYPE 3 OBJECT MARKER	12 x 36	1	3	
78+18 RT	OM3L	TYPE 3 OBJECT MARKER	12 x 36	1	3	
81+68 RT	W8-23	NO SHOULDER	36 x 36	1	9	
83+79 LT	OM3R	TYPE 3 OBJECT MARKER	12 x 36	1	3	
104+67 LT	R2-1	SPEED LIMIT 35	18 x 24	1	3	CANYON CREEK
104+67 RT	R2-1	SPEED LIMIT 35	18 x 24	1	3	
108+22 LT	OM3L	TYPE 3 OBJECT MARKER	12 x 36	1	3	
108+22 RT	OM3R	TYPE 3 OBJECT MARKER	12 x 36	1	3	
109+68 LT	OM3R	TYPE 3 OBJECT MARKER	12 x 36	1	3	
109+68 RT	OM3L	TYPE 3 OBJECT MARKER	12 x 36	1	3	
				ROUNDED TOTAL	**49**	

ITEM 63401-0300
PAVEMENT MARKINGS, TYPE B, SOLID (YELLOW) [1]

LOCATION	QUANTITY (LNFT)	REMARKS
47+81.15 to 50+79.67	1,194	MP4 AOP
71+00 to 85+00	5,600	TOWER CREEK
103+00 to 117+02.39	5,610	CANYON CREEK
TOTAL	**12,404**	

FOOTNOTE:

[1] Includes quantity for double application.

TABULATION OF PERMANENT TRAFFIC CONTROL QUANTITIES

70% PLAN IN HAND 04-18-2017

--/---
Designed by: C.Conrad 01/2017 Checked by:
c:\myfiles\pw_production\d0290748\wa-a2013020pa.dgn [US_Sur_ft2D]
18 April 2017 1:53 PM

STATE	PROJECT	SHEET NUMBER
WA	JEFF 91420(1)	L.2

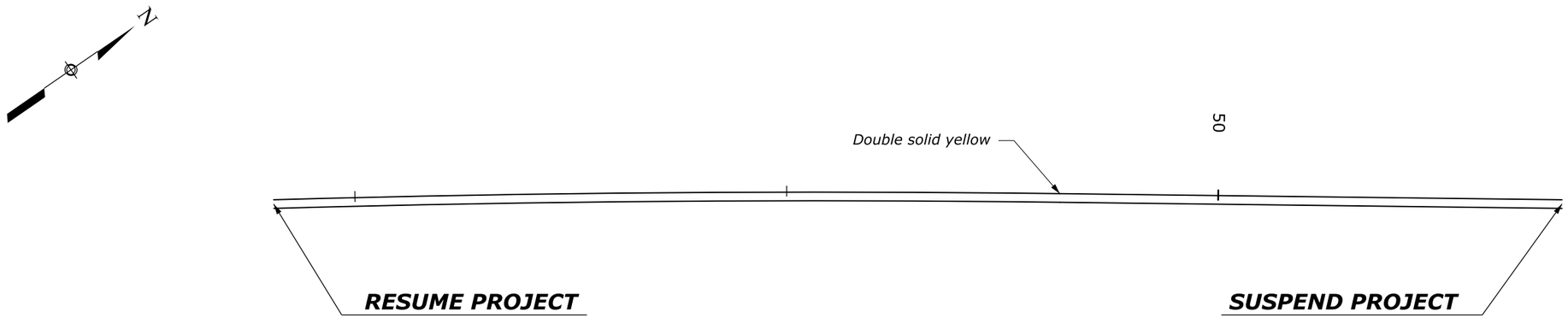

RESUME PROJECT

WA JEFF 91420(1)
UPPER HOH RIVER ROAD
47+81.15
N= 317,630.060
E= 818,093.592
EL= 265.88

SUSPEND PROJECT

WA JEFF 91420(1)
UPPER HOH RIVER ROAD
50+79.67
N= 317,423.417
E= 818,308.987
EL= 263.76

PERMANENT TRAFFIC CONTROL
MP 4 AOP
47+81.15 TO 50+79.67

70% PLAN IN HAND 04-18-2017

Designed by: C. Conrad | Checked by: 01/2017 | --/---

1 February 2017 6:45 AM c:\myfiles\pw_production\d0290748\wa-a2013020pb.dgn [US_Sur_ft2D]

STATE	PROJECT	SHEET NUMBER
WA	JEFF 91420(1)	L.3

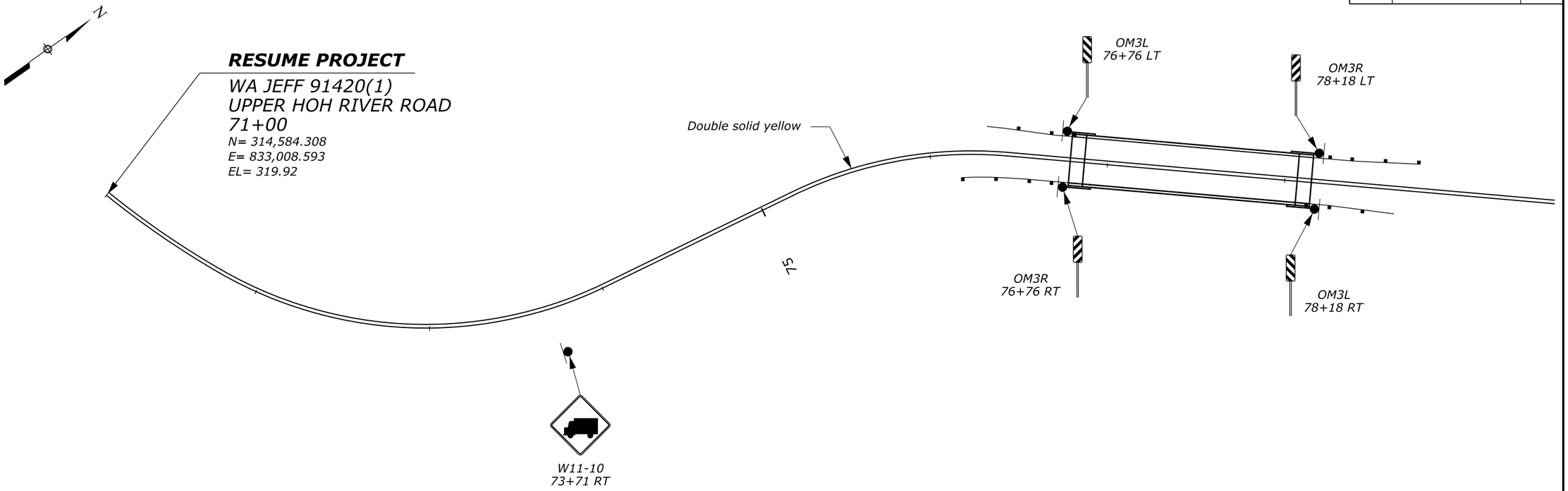

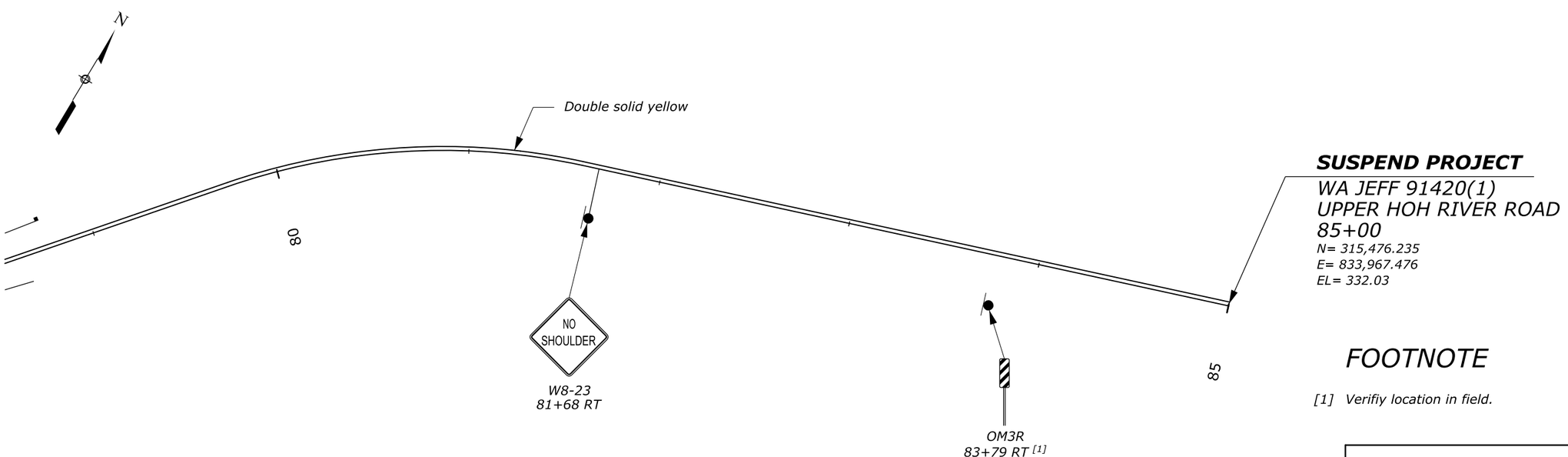

FOOTNOTE

[1] Verifiy location in field.

PERMANENT TRAFFIC CONTROL
TOWER CREEK
71+00 TO 85+00

70% PLAN IN HAND 04-18-2017

Designed by: C. Conrad | 01/2017 | Checked by: --/---

18 April 2017 1:55 PM c:\myfiles\pw_production\d0290748\wa-a2013020pc.dgn [US_Sur_ft2D]

STATE	PROJECT	SHEET NUMBER
WA	JEFF 91420(1)	L.4

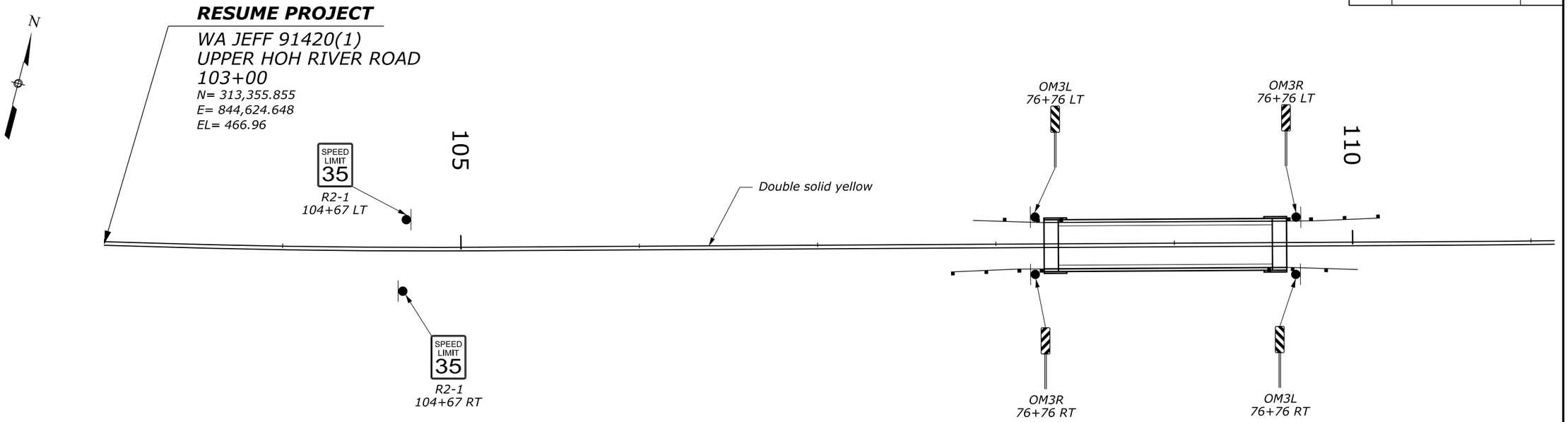

PERMANENT TRAFFIC CONTROL
CANYON CREEK
103+00 TO 117+02.29

70% PLAN IN HAND 04-18-2017

Designed by: C. Conrad | Checked by: 01/2017 | --/---

2 February 2017 7:09 AM c:\myfiles\pw_production\d0290748\wa-a2013020pd.dgn [US_Sur_ft2D]

STATE	PROJECT	SHEET NUMBER
WA	JEFF 91420(1)	L.5

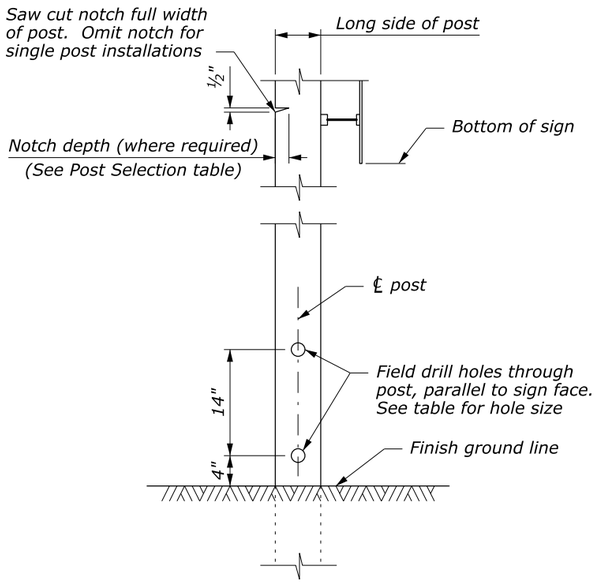

POST DETAIL

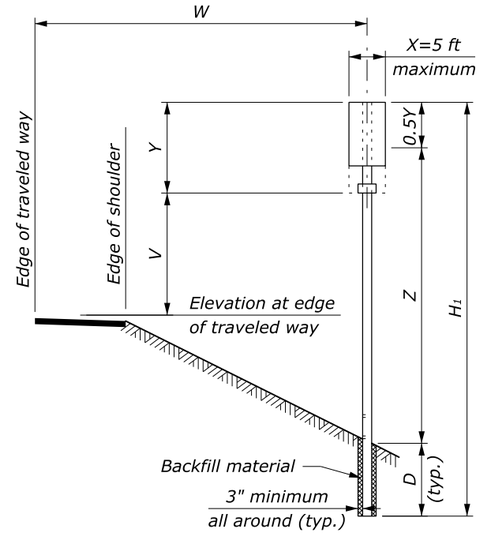

SINGLE POST SIGNS

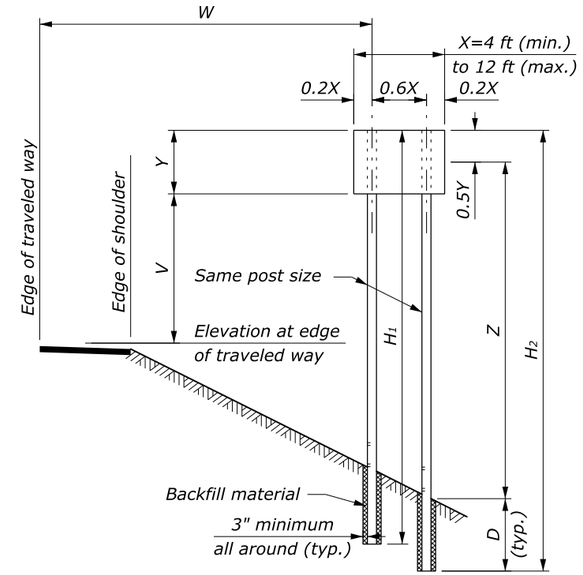

TWO POST SIGNS

NOTE:

1. Traffic barrier protection is required for all posts larger than 6" x 8" when located within the clear zone or if the post is vulnerable to being struck when placed outside the clear zone.
2. H_1 thru H_4 indicate overall post length. Select post lengths to fit field conditions.
3. D is the minimum post embedment depth for average soil conditions. See Wood Post Selection Table below.
4. Z is the height from ground line to mid-height of sign at the longest post.
5. For the purpose of post selection X and Y are as follows:
   - Single sign, or back to back signs: X and Y are the overall dimensions of the signs.
   - Multiple sign installations: X and Y are the dimensions of a rectangle enclosing all the signs.

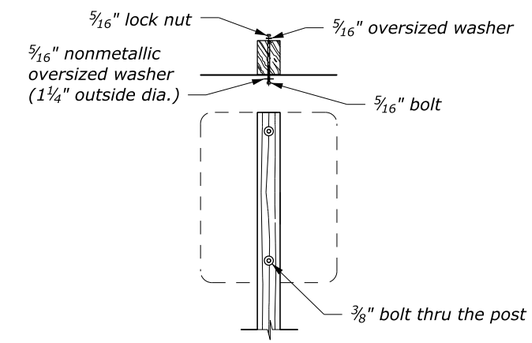

TYPICAL MOUNTING FOR SIGNS WITHOUT ANGLES

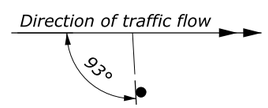

SIGN INSTALLATION ANGLE

For all retroflectorized signs where W > 25'

MINIMUM DISTANCE TO SIGN		
Location	Lateral Offset (W)	Mounting Height (V)
Rural Districts	6 ft	5 ft
Business or Residence Districts	2 ft from curb	7 ft

V may be reduced by 1 foot in rural districts for a secondary sign mounted below another sign.

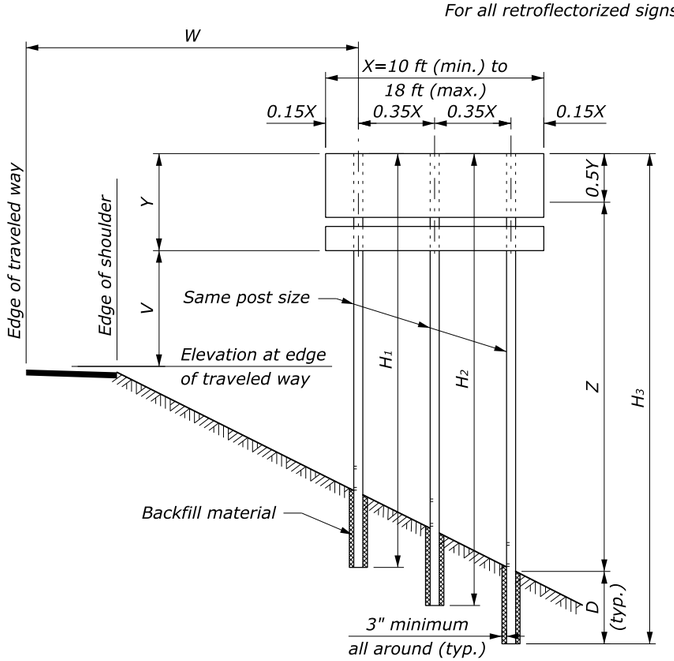

THREE POST SIGNS

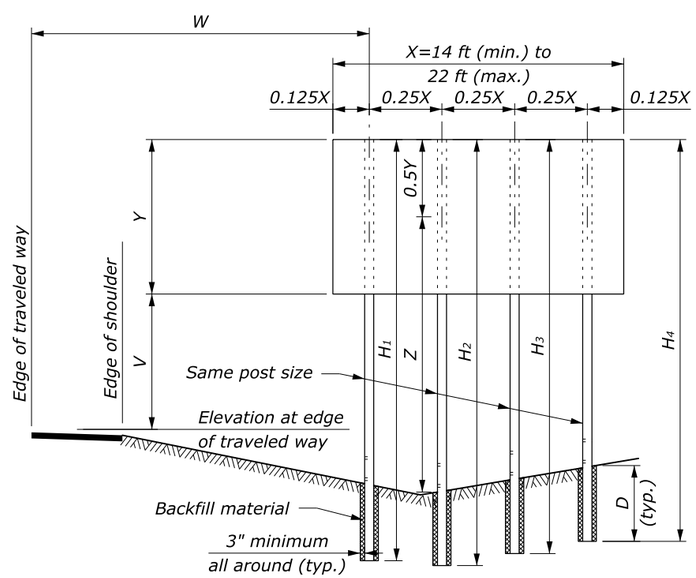

FOUR POST SIGNS

WOOD POST SELECTION TABLE						
POST SIZE (inch)	NUMBER OF POSTS				D	Notch depth and hole diameter
	1	2	3	4		
	Product of X-Y-Z in CUFT					
4 x 4	80	155	235	310	3'-0"	-
4 x 6	180	385	545	725	4'-0"	1¾"
6 x 6	235	475	710	950	4'-0"	1¾"
6 x 8	300	850	1280	1700	4'-0"	2½"
6 x 10	385	1180	1170	2360	5'-0"	-
8 x 10	575	1610	2410	3215	5'-0"	-
8 x 12	775	2310	3465	4620	6'-0"	-

Values shown are the maximum permitted. If the product of XYZ exceeds the limit for the largest post, use steel post installation.

NO SCALE

U.S. DEPARTMENT OF TRANSPORTATION
FEDERAL HIGHWAY ADMINISTRATION
WESTERN FEDERAL LANDS HIGHWAY DIVISION

U.S. CUSTOMARY DETAIL

PERMANENT SIGN INSTALLATION WOOD POSTS

DETAIL APPROVED FOR USE 10/2009

REVISED:

DETAIL W633-7

70% PLAN IN HAND 04-18-2017

1 February 2017 9:17 AM c:\myfiles\pw_production\d0290748\wa-a2013020pe.dgn [USC]

STATE	PROJECT	SHEET NUMBER
WA	JEFF 91420(1)	L.6

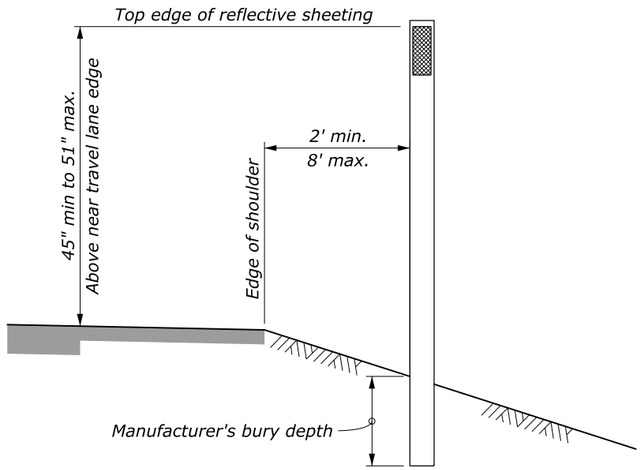

FLEXIBLE DELINEATOR
GROUND MOUNTED

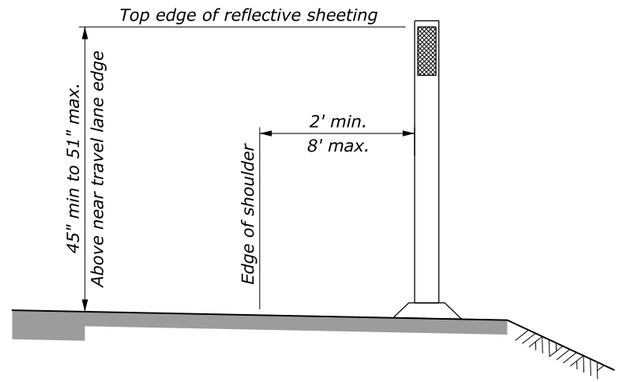

FLEXIBLE DELINEATOR
SURFACE MOUNTED

NOTE:

1. When a delineator falls within a cross road or approach, the delineator may be moved in either direction a distance not to exceed one quarter of the normal spacing. Eliminate the delineator if this allowance is exceeded.
2. Place delineators 2 feet from the edge of design shoulder unless otherwise specified.
3. Install delineators behind the rail at guardrail locations. Either drive the delineator in line with the guardrail posts or mount a shorter delineator onto the guardrail post as shown on this sheet.
4. When the contract does not provide for the construction of the ultimate pavement, allow for the thickness of base and pavement to be placed later when establishing the elevation of the traffic delineators.
5. Use the current edition of the Manual on Uniform Traffic Control Devices for Streets and Highways (MUTCD) as a guide for delineation layout.

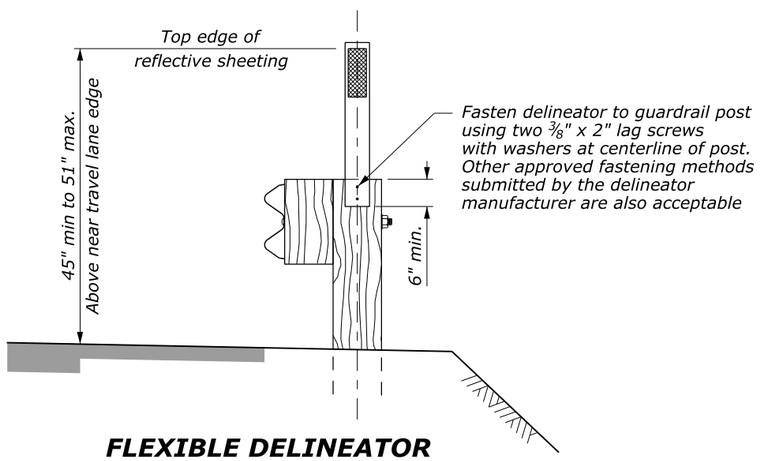

FLEXIBLE DELINEATOR
GUARDRAIL MOUNTED OPTION
(Use only with wood guardrail posts)

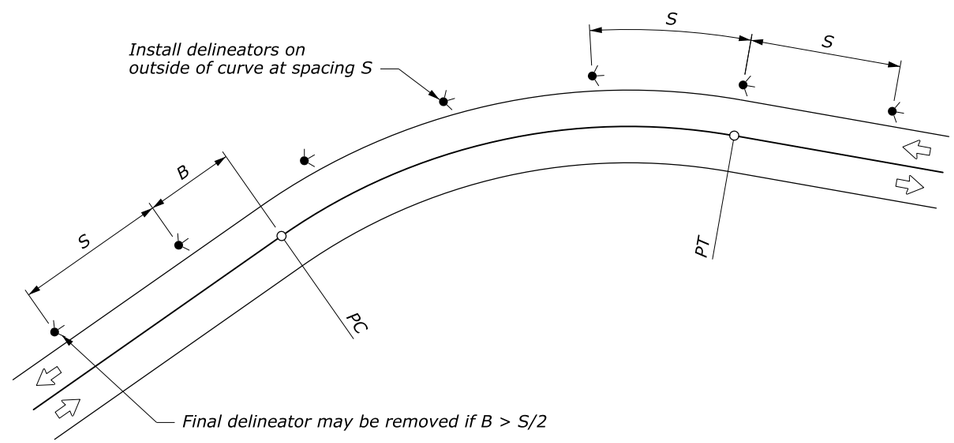

PLACEMENT ON HORIZONTAL CURVES

DELINEATOR SPACING ON HORIZONTAL CURVES	
CURVE RADIUS (FEET)	SPACING (S) (FEET)
50	20
115	25
180	35
250	40
300	50
400	55
500	65
600	70
700	75
800	80
900	85
1,000	90

Spacing for a specific curve may be interpolated from the table, or calculated using the formula:
Spacing = $3\sqrt{R-50}$.
The minimum spacing should be 20 feet.
Curve spacing should not exceed 300 feet.

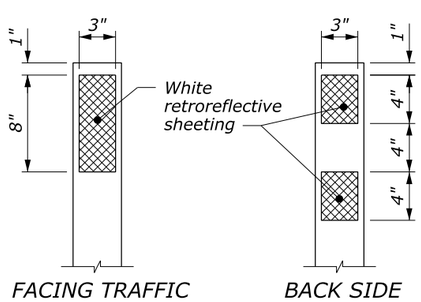

REFLECTIVE SHEETING DETAIL

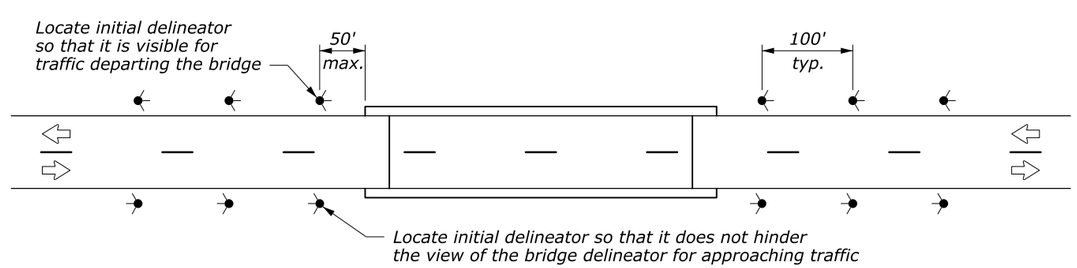

PLACEMENT AT BRIDGE APPROACHES

NO SCALE

U.S. DEPARTMENT OF TRANSPORTATION
FEDERAL HIGHWAY ADMINISTRATION
WESTERN FEDERAL LANDS HIGHWAY DIVISION

U.S. CUSTOMARY DETAIL

WASHINGTON DELINEATORS

DETAIL APPROVED FOR USE 1/2008
REVISED:

DETAIL
W633-80

70% PLAN IN HAND 04-18-2017

1 February 2017 9:18 AM c:\myfiles\pw_production\d0290748\wa-a20130020pf.dgn [USC]

STATE	PROJECT	SHEET NUMBER
WA	JEFF 91420(1)	L.7

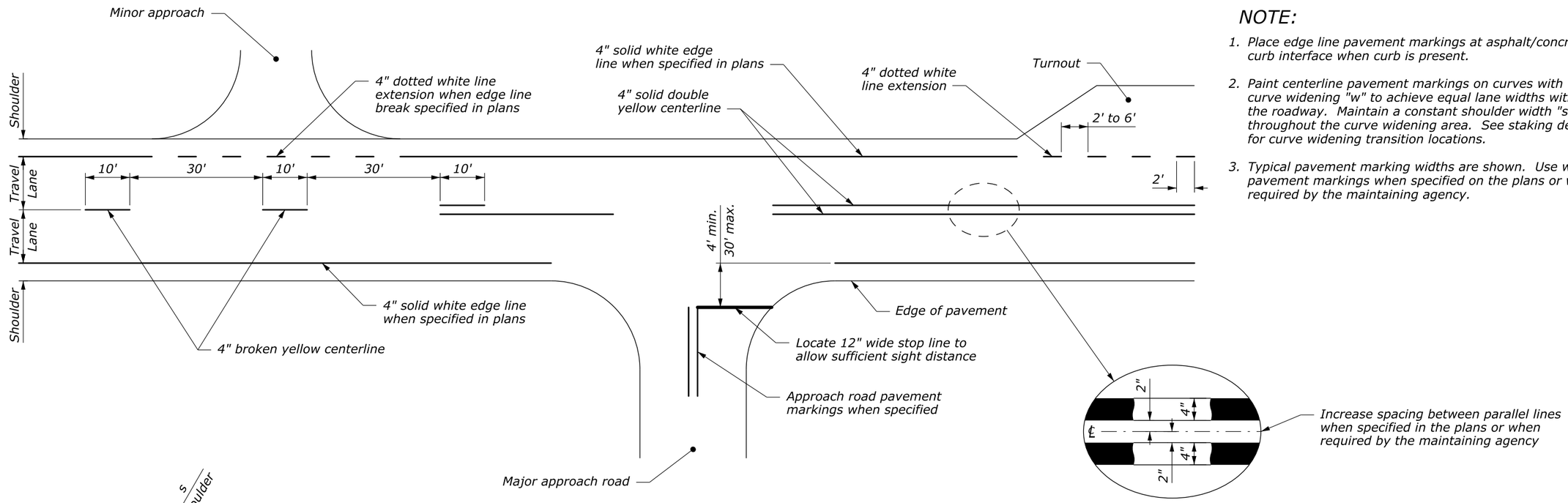

TYPICAL PAVEMENT MARKING APPLICATIONS

CENTERLINE DETAIL

NOTE:

1. Place edge line pavement markings at asphalt/concrete curb interface when curb is present.
2. Paint centerline pavement markings on curves with curve widening "w" to achieve equal lane widths within the roadway. Maintain a constant shoulder width "s" throughout the curve widening area. See staking details for curve widening transition locations.
3. Typical pavement marking widths are shown. Use wider pavement markings when specified on the plans or when required by the maintaining agency.

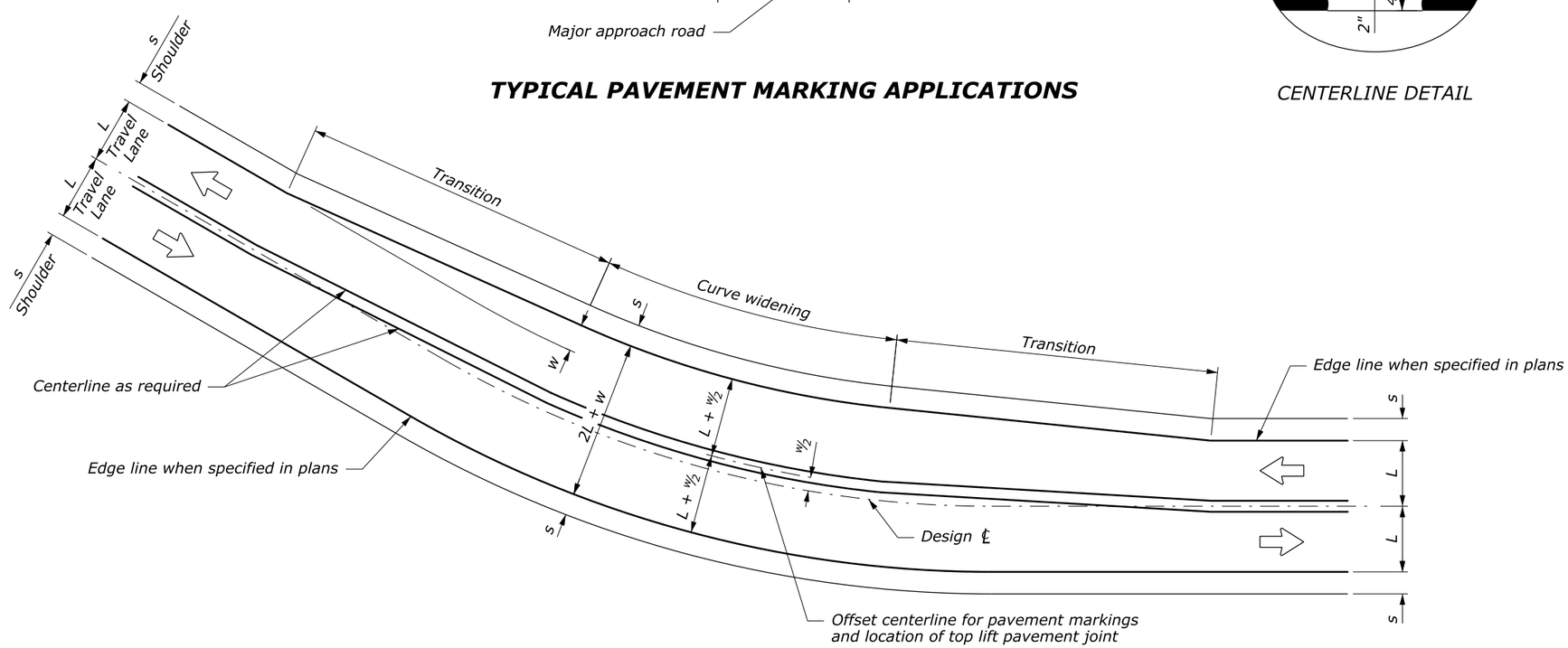

CENTERLINE MODIFICATION FOR CURVES WITH WIDENING APPLIED ON INSIDE

See Note 2 for treatment of curves when widening "w" is split equally on both sides of centerline

NO SCALE

U.S. DEPARTMENT OF TRANSPORTATION
FEDERAL HIGHWAY ADMINISTRATION
WESTERN FEDERAL LANDS HIGHWAY DIVISION

U.S. CUSTOMARY DETAIL

LINEAR PAVEMENT MARKINGS

DETAIL APPROVED FOR USE 10/2007
REVISED: 10/2012

DETAIL W634-2

70% PLAN IN HAND 04-18-2017

1 February 2017 9:18 AM c:\myfiles\pw_production\d0290748\wa-a2013020pg.dgn [USC]