U.S. Department of Transportation
Federal Highway Administration

1200 New Jersey Ave., SE
Washington, D.C. 20590

June 3, 2020

In Reply Refer To:
HSST-1/B-342

Mr. David King
KESS Corporation
23 Alamo Court
Elizabethtown, KY 42701
USA

Dear Mr. King:

This letter is in response to your March 25, 2020 request for the Federal Highway Administration (FHWA) to review a roadside safety device, hardware, or system for eligibility for reimbursement under the Federal-aid highway program. This FHWA letter of eligibility is assigned FHWA control number B-342 and is valid until a subsequent letter is issued by FHWA that expressly references this device.

Decision

The following device is eligible within the length-of-need, with details provided in the form which is attached as an integral part of this letter:

- 8-inch King MASH16 Composite Block on 31" MGS

Scope of this Letter

To be found eligible for Federal-aid funding, new roadside safety devices should meet the crash test and evaluation criteria contained in the American Association of State Highway and Transportation Officials'(AASHTO) Manual for Assessing Safety Hardware (MASH). However, the FHWA, the Department of Transportation, and the United States Government do not regulate the manufacture of roadside safety devices. Eligibility for reimbursement under the Federal-aid highway program does not establish approval, certification or endorsement of the device for any particular purpose or use.

This letter is not a determination by the FHWA, the Department of Transportation, or the United States Government that a vehicle crash involving the device will result in any particular outcome, nor is it a guarantee of the in-service performance of this device. Proper manufacturing, installation, and maintenance are required in order for this device to function as tested.

This finding of eligibility is limited to the crashworthiness of the system and does not cover other structural features, nor conformity with the Manual on Uniform Traffic Control Devices.

Eligibility for Reimbursement

Based solely on a review of crash test results and certifications submitted by the manufacturer, and the crash test laboratory, FHWA agrees that the device described herein meets the crash test and evaluation criteria of the AASHTO's MASH. Therefore, the device is eligible for reimbursement under the Federal-aid highway program if installed under the range of tested conditions.

Name of system: 8-inch King MASH16 Composite Block on 31" MGS
Type of system: Longitudinal Barrier
Test Level: MASH Test Level 3 (TL3)
Testing conducted by: Texas A&M Transportation Institute
Date of request: March 25, 2020

FHWA concurs with the recommendation of the accredited crash testing laboratory on the attached form.

Full Description of the Eligible Device

The device and supporting documentation, including reports of the crash tests or other testing done, videos of any crash testing, and/or drawings of the device, are described in the attached form.

Notice

This eligibility letter is issued for the subject device as tested. Modifications made to the device are not covered by this letter. Any modifications to this device should be submitted to the user (i.e., state DOT) as per their requirements.

You are expected to supply potential users with sufficient information on design, installation and maintenance requirements to ensure proper performance.

You are expected to certify to potential users that the hardware furnished has the same chemistry, mechanical properties, and geometry as that submitted for review, and that it will meet the test and evaluation criteria of AASHTO's MASH.

Issuance of this letter does not convey property rights of any sort or any exclusive privilege. This letter is based on the premise that information and reports submitted by you are accurate and correct. We reserve the right to modify or revoke this letter if: (1) there are any inaccuracies in the information submitted in support of your request for this letter, (2) the qualification testing was flawed, (3) in-service performance or other information reveals safety problems, (4) the system is significantly different from the version that was crash tested, or (5) any other information indicates that the letter was issued in error or otherwise does not reflect full and complete information about the crashworthiness of the system.

Standard Provisions

- To prevent misunderstanding by others, this letter of eligibility designated as FHWA control number B-342 shall not be reproduced except in full. This letter and the test documentation upon which it is based are public information. All such letters and documentation may be reviewed upon request.

- This letter shall not be construed as authorization or consent by the FHWA to use, manufacture, or sell any patented system for which the applicant is not the patent holder.

- This FHWA eligibility letter is not an expression of any Agency view, position, or determination of validity, scope, or ownership of any intellectual property rights to a specific device or design. Further, this letter does not impute any distribution or licensing rights to the requester. This FHWA eligibility letter determination is made based solely on the crash-testing information submitted by the requester. The FHWA reserves the right to review and revoke an earlier eligibility determination after receipt of subsequent information related to crash testing.

Sincerely,

Michael S. Griffith

Michael S. Griffith
Director, Office of Safety Technologies
Office of Safety

Enclosures

Request for Federal Aid Reimbursement Eligibility of Highway Safety Hardware

Submitter	Date of Request:	March 25, 2020	◉ New ○ Resubmission
	Name:	David King	
	Company:	KESS Corporation	
	Address:	23 Alamo Court, Elizabethtown, KY 42701	
	Country:	USA	
	To:	Michael S. Griffith, Director FHWA, Office of Safety Technologies	

I request the following devices be considered eligible for reimbursement under the Federal-aid highway program.

Device & Testing Criterion - Enter from right to left starting with Test Level

!-!-!

System Type	Submission Type	Device Name / Variant	Testing Criterion	Test Level
'B': Rigid/Semi-Rigid Barriers (Roadside, Median, Bridge Railings)	◉ Physical Crash Testing ○ Engineering Analysis	8-inch King MASH16 Composite Block on 31" MGS	AASHTO MASH	TL3

By submitting this request for review and evaluation by the Federal Highway Administration, I certify that the product(s) was (were) tested in conformity with the AASHTO Manual for Assessing Safety Hardware and that the evaluation results meet the appropriate evaluation criteria in the MASH.

Individual or Organization responsible for the product:

Contact Name:	David King	Same as Submitter ☒
Company Name:	KESS Corporation	Same as Submitter ☒
Address:	23 Alamo Court, Elizabethtown, KY 42701	Same as Submitter ☒
Country:	USA	Same as Submitter ☒

Enter below all disclosures of financial interests as required by the FHWA `Federal-Aid Reimbursement Eligibility Process for Safety Hardware Devices' document.

Texas A&M Transportation Institute (TTI) was contracted by the KESS Corporation to perform full-scale crash testing of the 8-inch King MASH16 Composite Block on 31" MGS. There are no shared financial interests in the 8-inch King MASH16 Composite Block on 31" MGS by TTI, or between KESS Corporation and TTI, other than the costs involved in the actual crash tests and reports for this submission to FHWA.

PRODUCT DESCRIPTION

(●) New Hardware or Significant Modification ( ) Modification to Existing Hardware

The test installation consisted of 162.5 ft of 12-gauge W-beam guardrail sections supported by 6-ft long W6×8.5 steel posts, with a TxDOT Downstream Anchor Terminal (DAT) on each end, for a total length of 181.25 ft. The top of the W-beam guardrail was located 31 inches above grade, and the posts were spaced at 75 inches. W-beam guardrail splices were located mid-span between posts. All steel was galvanized per ASTM International (ASTM) A123 or ASTM A153 specification. The rails were held off the posts in the length of need with 8-inch King MASH16 composite blockouts and secured with 10-inch guardrail bolts and nuts. The guardrail posts were embedded 40 inches. The supplied 8-inch King MASH16 composite blocks were formed using 99% recycled high-density polyethylene (HDPE) - blowing agent. The 8-inch King MASH16 composite blocks are an alternate choice to be used in conjunction with the 31" Midwest Guardrail System (MGS).

CRASH TESTING

By signature below, the Engineer affiliated with the testing laboratory, agrees in support of this submission that all of the critical and relevant crash tests for this device listed above were conducted to meet the MASH test criteria. The Engineer has determined that no other crash tests are necessary to determine the device meets the MASH criteria.

Engineer Name:	D. Lance Bullard, Jr. P.E.	
Engineer Signature:	D. Lance Bullard, Jr. Digitally signed by D. Lance Bullard, Jr. Date: 2020.03.27 16:36:02 -05'00'	
Address:	3100 SH 47, Bldg 7091, Byran, Texas 77807 ~~TTI, TAMU 3135, College Station, TX 77843-3135~~	Same as Submitter ☐
Country:	USA	Same as Submitter ☐

A brief description of each crash test and its result:

Required Test Number	Narrative Description	Evaluation Results
3-10 (1100C)	Test 3-10 involves an 1100C vehicle impacting the test article at a target impact speed of 62 mi/h and target angle of 25°. The target CIP for the left corner of the front bumper was 8.5 ft upstream of the centerline of Post #12. The results of the test conducted on January 17, 2020 are found in TTI Test Report No. 690900-KES2-3. The test vehicle was traveling at a speed of 65.0 mi/h as it made contact with the 31-inch MGS Guardrail with 8-inch King MASH16 Composite Blocks 8.3 ft upstream of the centerline of Post #12 and at an impact angle of 25.1°. After loss of contact with the barrier, the vehicle came to rest 210 ft downstream of the impact point and 82 ft toward the traffic side. The 31-inch MGS Guardrail with 8-inch King MASH16 Composite Blocks contained and redirected the 1100C vehicle. The vehicle did not penetrate, underride, or override the installation. The vehicle exited within the exit box criteria defined in MASH. Maximum dynamic deflection of the rail during the test was 32.9 inches. Maximum permanent deformation was 18.0 inches. Working width was 38.9 inches, and height of working width was 1.0 inch. The 1100C vehicle remained upright during and after the collision event. Maximum roll and pitch angles were 10° and 6°, respectively. Longitudinal OIV was 19.0 ft/s and lateral OIV was 16.1 ft/s. Maximum longitudinal occupant ridedown acceleration was 8.3 g, and maximum lateral occupant ridedown acceleration was 8.9 g. Occupant risk factors were within the maximum limits specified in MASH. Maximum exterior crush to the vehicle was 11.5 inches in the side plane at the right front corner at bumper height. No occupant compartment deformation or intrusion was observed. The 31-inch MGS Guardrail with 8-inch King MASH16 Composite Blocks performed acceptably for MASH test 3-10.	PASS

Required Test Number	Narrative Description	Evaluation Results
3-11 (2270P)	Test 3-11 involves a 2270P vehicle impacting the test article at a target impact speed of 62 mi/h and target angle of 25°. The target CIP for the left corner of the front bumper was the centerline of the face of post 14. The results of the test conducted on January 9, 2020 are found in TTI Test Report No. 690900-KES2-3. The test vehicle was traveling at a speed of 63.0 mi/h as it made contact with the 31-inch MGS Guardrail with 8-inch King MASH16 Composite Blocks centerline of Post #14 and at an impact angle of 24.8°. After loss of contact with the barrier, the vehicle came to rest 179 ft downstream of the impact point and 34 ft toward the field side. The 31-inch MGS Guardrail with 8-inch King MASH16 Composite Blocks contained and redirected the 2270P vehicle. The vehicle did not penetrate, underride, or override the installation. The vehicle exited within the exit box criteria defined in MASH. Maximum dynamic deflection during the test was 48.2 inches. Maximum permanent deformation was 29.5 inches. Working width was 57.0 inches, and the height of working width was 65.3 inches. The 2270P vehicle remained upright during and after the collision event. Maximum roll and pitch angles were 15° and 7°, respectively. Longitudinal OIV was 20.0 ft/s and lateral OIV was 13.1 ft/s. Maximum longitudinal occupant ridedown acceleration was 5.2 g and maximum lateral occupant ridedown acceleration was 6.3 g. Occupant risk factors were within the preferred limits specified in MASH. Maximum exterior crush to the vehicle was 14.0 inches in the side plane at the right front corner at bumper height. No occupant compartment deformation or intrusion was observed. The 31-inch MGS Guardrail with 8-inch King MASH16 Composite Blocks performed acceptably for MASH test 3-11.	PASS

3-20 (1100C)	This product is not a transition system.	Non-Relevant Test, not conducted
3-21 (2270P)	This product is not a transition system.	Non-Relevant Test, not conducted

Full Scale Crash Testing was done in compliance with MASH by the following accredited crash test laboratory (cite the laboratory's accreditation status as noted in the crash test reports.):

Laboratory Name:	Texas A&M Transportation Institute	
Laboratory Signature:	Digitally signed by Darrell L. Kuhn 'Date: 2020.03.26 17:02:50 -05'00	
Address:	3100 SH 47, Bldg 7091, Byran, Texas 77807 TTI, TAMU 3135, College Station, TX 77843-3135	Same as Submitter ☐
Country:	USA	Same as Submitter ☐
Accreditation Certificate Number and Dates of current Accreditation period :	ISO 17025-2017 Laboratory A2LA Certificate Number: 2821.01 Valid To: April 30, 2021	

Submitter Signature*:

Submit Form

ATTACHMENTS

Attach to this form:

1) Additional disclosures of related financial interest as indicated above.
2) A copy of the full test report, video, and a Test Data Summary Sheet for each test conducted in support of this request.
3) A drawing or drawings of the device(s) that conform to the Task Force-13 Drawing Specifications [Hardware Guide Drawing Standards]. For proprietary products, a single isometric line drawing is usually acceptable to illustrate the product, with detailed specifications, intended use, and contact information provided on the reverse. Additional drawings (not in TF-13 format) showing details that are relevant to understanding the dimensions and performance of the device should also be submitted to facilitate our review.

FHWA Official Business Only:

Eligibility Letter		
Number	Date	Key Words

0.000 s

0.200 s

0.400 s

0.600 s

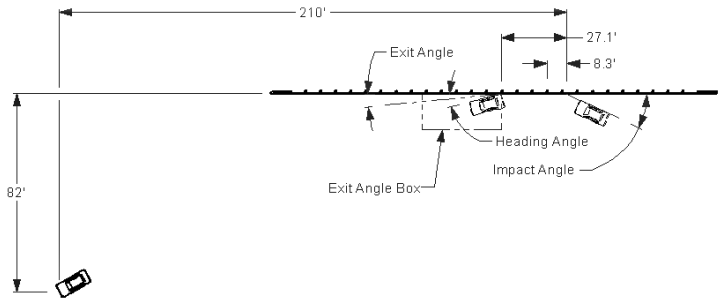

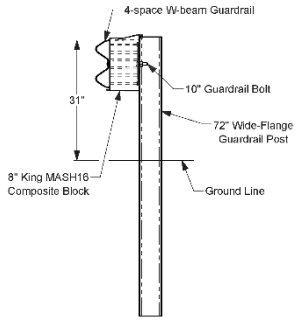

General Information
- Test Agency ..... Texas A&M Transportation Institute (TTI)
- Test Standard Test No. ..... MASH Test 3-10
- TTI Test No. 690900-KES2
- Test Date 2020-01-17

Test Article
- Type ..... Longitudinal Barrier - Guardrail
- Name ..... MGS Guardrail with 8-inch King MASH16 Composite Blocks
- Installation Length ..... 162.5 ft LON + 2 DAT's for 181.25 ft
- Material or Key Elements ... 12-gauge W-beam guardrail sections supported by W6×8.5 steel posts with 8-inch King MASH16 composite blockouts

Soil Type and Condition ..... AASHTO M147 Grading B Soil (crushed limestone), Dry

Test Vehicle
- Type/Designation 1100C
- Make and Model ..... 2009 Kia Rio
- Curb ..... 2413 lb
- Test Inertial ..... 2422 lb
- Dummy ..... 165 lb
- Gross Static ..... 2587 lb

Impact Conditions
- Speed ..... 65.0 mi/h
- Angle ..... 25.1°
- Location/Orientation ..... 8.3 ft upstream of post 12

Impact Severity ..... 62 kip-ft

Exit Conditions
- Speed ..... 32.1 mi/h
- Trajectory/Heading Angle ... 15.7° / 17.4°

Occupant Risk Values
- Longitudinal OIV ..... 19.0 ft/s
- Lateral OIV ..... 16.1 ft/s
- Longitudinal Ridedown ..... 8.3 g
- Lateral Ridedown ..... 8.9 g
- THIV ..... 7.4 m/s
- ASI 0.87

Max. 0.050-s Average
- Longitudinal ..... -6.9 g
- Lateral ..... -6.6 g
- Vertical ..... 2.4 g

Post-Impact Trajectory
- Stopping Distance ..... 210 ft downstream 82 ft twd traffic

Vehicle Stability
- Maximum Yaw Angle ..... 51°
- Maximum Pitch Angle ..... 6°
- Maximum Roll Angle ..... 10°
- Vehicle Snagging ..... No
- Vehicle Pocketing ..... No

Test Article Deflections
- Dynamic ..... 32.9 inches
- Permanent ..... 18.0 inches
- Working Width ..... 38.9 inches
- Height of Working Width ..... 1.0 inch

Vehicle Damage
- VDS 01RFQ5
- CDC 01FREW3
- Max. Exterior Deformation ..... 11.5 inches
- OCDI FR0000000
- Max. Occupant Compartment Deformation ..... None

Figure 5.8. Summary of Results for *MASH* Test 3-10 on 31-inch MGS Guardrail with 8-inch King MASH16 Composite Blocks.


0.000 s


0.200 s


0.400 s


0.600 s

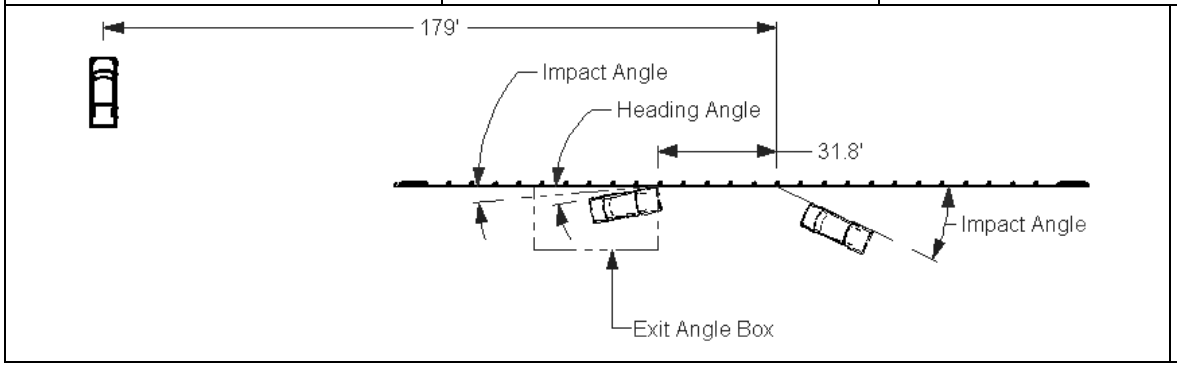

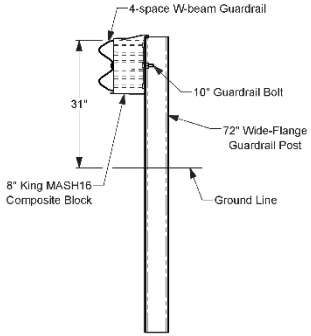

General Information
- Test Agency ..... Texas A&M Transportation Institute (TTI)
- Test Standard Test No. ..... MASH Test 3-11
- TTI Test No. 690900-KES3
- Test Date 2020-01-09

Test Article Longitudinal Barrier - Guardrail
- Type ..... MGS Guardrail with 8-inch King MASH16 Composite Blocks
- Name ..... 162.5 ft LON + 2 DAT's for 181.25 ft
- Installation Length ..... 12-gauge W-beam guardrail sections
- Material or Key Elements ... supported by W6×8.5 steel posts with 8-inch King MASH16 composite blockouts

Soil Type and Condition ..... AASHTO M147 Grading B Soil (crushed limestone), Dry

Test Vehicle
- Type/Designation 2270P
- Make and Model ..... 2014 RAM 1500 Pickup Truck
- Curb ..... 5025 lb
- Test Inertial ..... 5072 lb
- Dummy ..... No dummy
- Gross Static ..... 5072 lb

Impact Conditions
- Speed ..... 63.0 mi/h
- Angle ..... 24.8°
- Location/Orientation ..... Centerline post 14

Impact Severity ..... 118 kip-ft

Exit Conditions
- Speed ..... 36.4 mi/h
- Angle ..... 15.2° / 16.6°

Occupant Risk Values
- Longitudinal OIV ..... 20.0 ft/s
- Lateral OIV ..... 13.1 ft/s
- Longitudinal Ridedown ..... 5.2 g
- Lateral Ridedown ..... 6.3 g
- THIV ..... 7.0 m/s
- ASI 0.63

Max. 0.050-s Average
- Longitudinal ..... -6.3 g
- Lateral ..... -4.6 g
- Vertical ..... -4.9 g

Post-Impact Trajectory
- Stopping Distance ..... 179 ft downstream
  34 ft twd field side

Vehicle Stability
- Maximum Yaw Angle ..... 46°
- Maximum Pitch Angle ..... 7°
- Maximum Roll Angle ..... 15°
- Vehicle Snagging ..... No
- Vehicle Pocketing ..... No

Test Article Deflections
- Dynamic ..... 48.2 inches
- Permanent ..... 29.5 inches
- Working Width ..... 57.0 inches
- Height of Working Width ..... 65.3 inches

Vehicle Damage
- VDS 01RFQ5
- CDC 01FREW4
- Max. Exterior Deformation ..... 14.0 inches
- OCDI FR0000000
- Max. Occupant Compartment Deformation ..... None

Figure 6.8. Summary of Results for *MASH* Test 3-11 on 31-inch MGS Guardrail with 8-inch King MASH16 Composite Blocks.

Test Installation

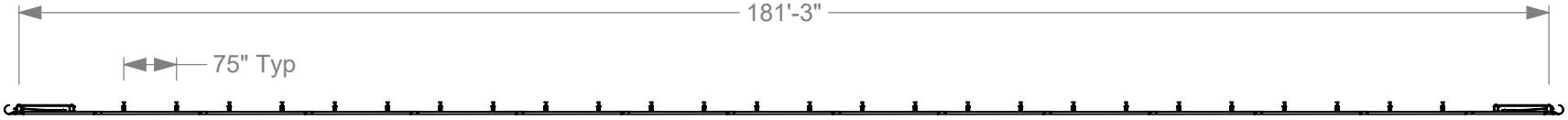

Plan View

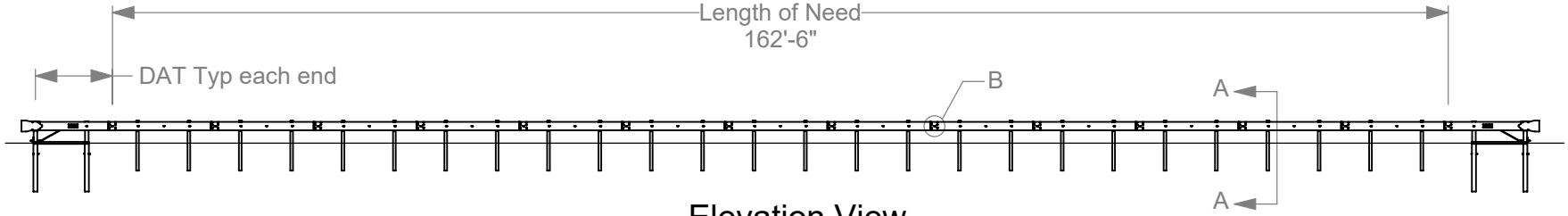

Elevation View

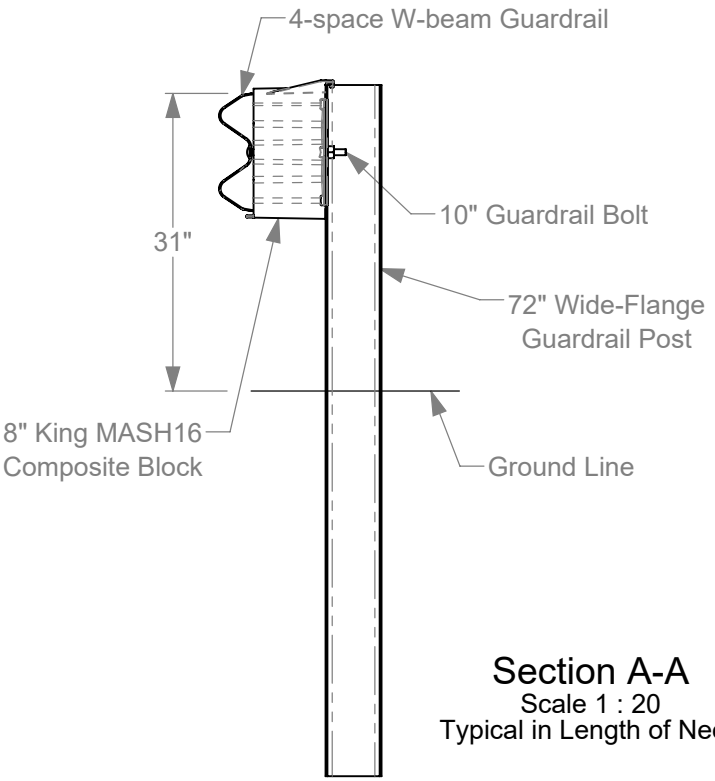

Section A-A
Scale 1 : 20
Typical in Length of Need

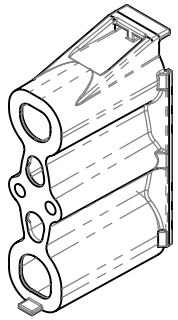

8" King MASH16
Composite Block

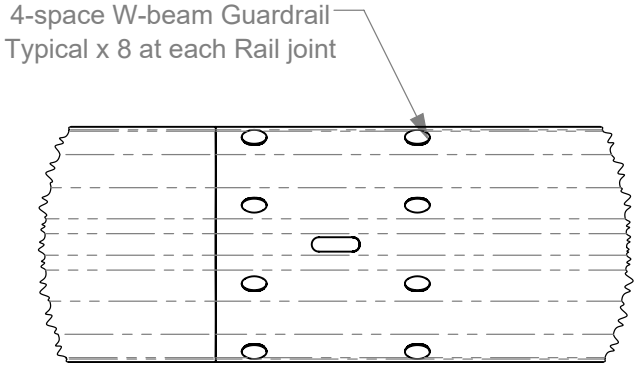

Detail B
Scale 1 : 10

1a. Backfill Post holes with Type A grade 2 crushed limestone road base, compacted to MASH standard.

1b. Recessed Guardrail Nuts on all Button-head Guardrail Bolts.

1c. All steel products shall be fabricated in accordance with ASTM A6 specifications and tolerances.

Texas A&M Transportation Institute		Roadside Safety and Physical Security Division - Proving Ground	
Project #690900-KES 2-3 King Blockouts Guardrail			2020-01-02
Drawn by GES	Scale 1:250	Sheet 1 of 1 Test Installation	

Q:\Accreditation-17025-2017\EIR-000 Project Files\690900\KES - KESS Corporation - Bullard\KES1-3\Drafting, KES\690900-KES Drawing

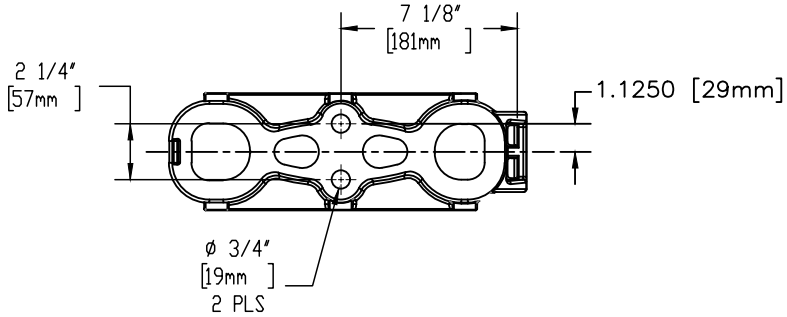

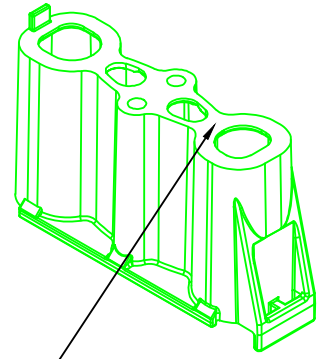

PATENT NUMBERS, LOGO & RECYCLE SYMBOL DISPLAYED IN THIS LOCATION

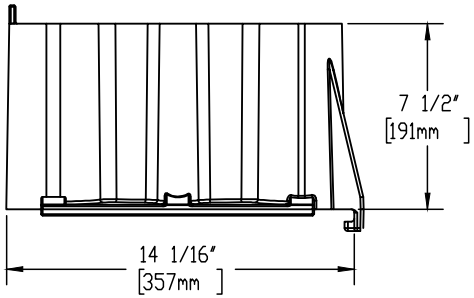

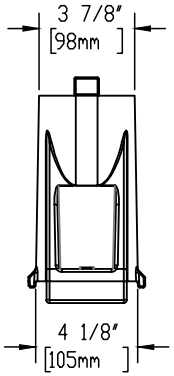

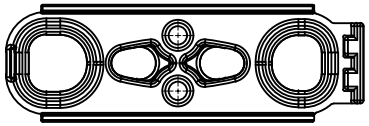

Notes:

1. Material: HDPE 99% Regrind/Blowing agent & 1% Black Color Concentrate

UNLESS OTHERWISE SPECIFIED: DIMENSIONS ARE IN INCHES SURFACE FINISH: TOLERANCES:PER SPI AQ-102 LINEAR: ANGULAR:	FINISH:				REMOVE FLASH AS NECESSARY	DO NOT SCALE DRAWING	REVISION
	NAME	SIGNATURE	DATE			TITLE: KING BLOCK DESIGNED FOR M-SH TEST	
DRAWN	DK						
CHK'D	DK						
APPV'D	DK						
MFG	DK						
Q.A	DK					DWG NO. king_block_100218	A3
				WEIGHT: 4.55 LBS		SCALE:1:5	SHEET 1 OF 1

DAT System

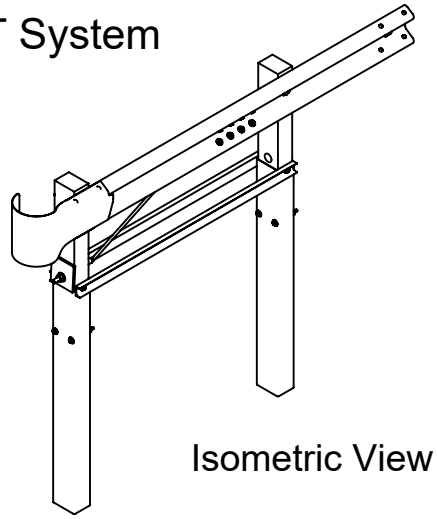

Isometric View

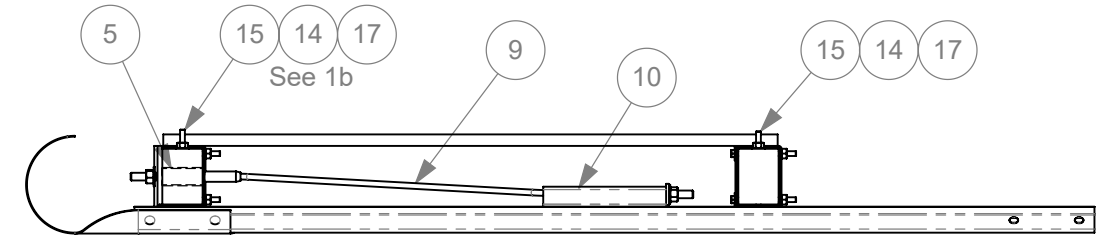

Plan View

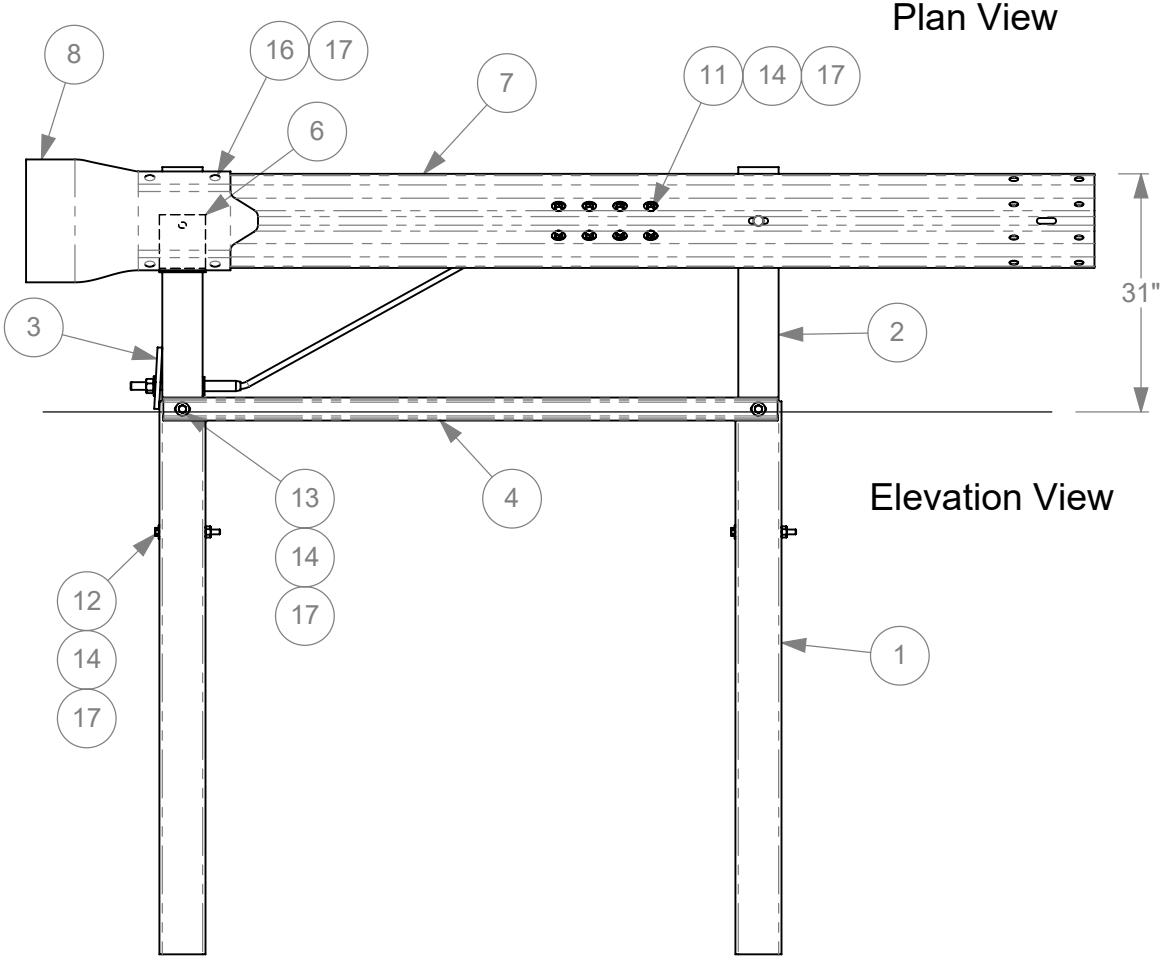

Elevation View

#	Part Name	Qty.
1	Foundation Tube	2
2	Terminal Timber Post	2
3	BCT Bearing Plate	1
4	DAT Strut	2
5	BCT Post Sleeve	1
6	Shelf Angle Bracket	1
7	DAT Terminal Rail	1
8	W-beam End Section	1
9	Anchor Cable Assembly	1
10	Guardrail Anchor Bracket	1
11	Bolt, 5/8 x 2" hex	8
12	Bolt, 5/8 x 8" hex	4
13	Bolt, 5/8 x 10" hex	2
14	Washer, 5/8 F844	16
15	10" Guardrail Bolt	2
16	1-1/4" Guardrail Bolt	4
17	Recessed Guardrail Nut	20

1a. All bolts are ASTM A307.

1b. Hardware secures Shelf Angle Bracket to Post. Rail is supported by Shelf Angle Bracket and does not attach directly to Post.

Texas A&M Transportation Institute	Roadside Safety and Physical Security Division - Proving Ground	
DAT (Downstream Anchor Terminal)		2019-07-26
Drawn by GES	Scale 1:25	Sheet 1 of 3

T:\Drafting Department\Solidworks\Standard Parts\Guardrail Parts and Subs\Guardrail Drawings\DAT

DAT Parts sheet 1

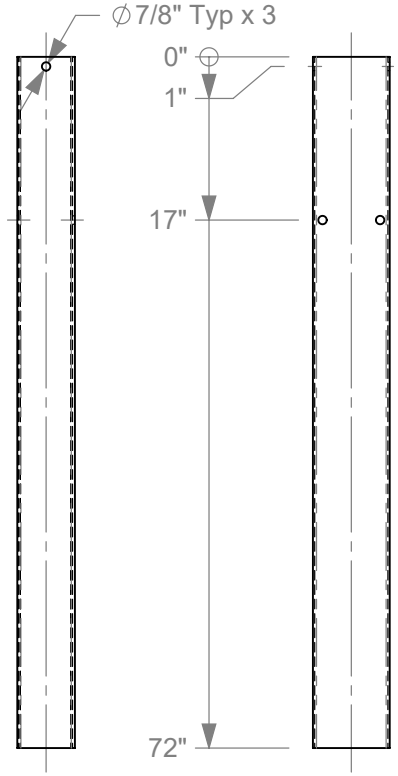

Foundation Tube

HSS 8" x 6" x 1/8"

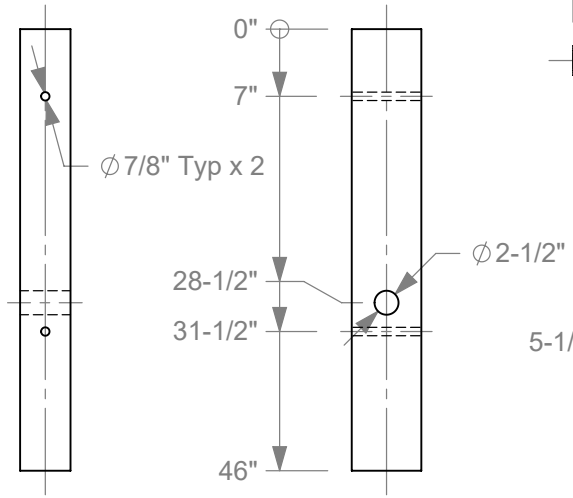

Terminal Timber Post

5-1/4" x 7-1/4"

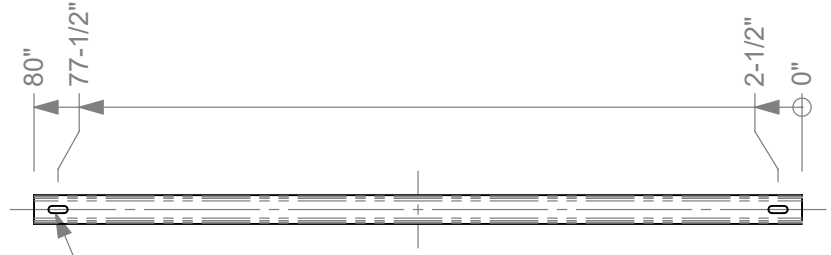

DAT Strut

C 3 x 5

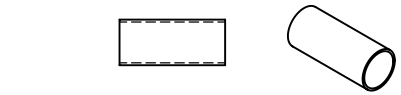

BCT Post Sleeve

2" schedule 40 Pipe - Scale 1:10

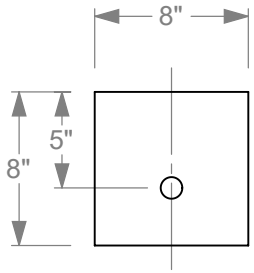

BCT Bearing Plate

5/8" Plate - Scale 1:10

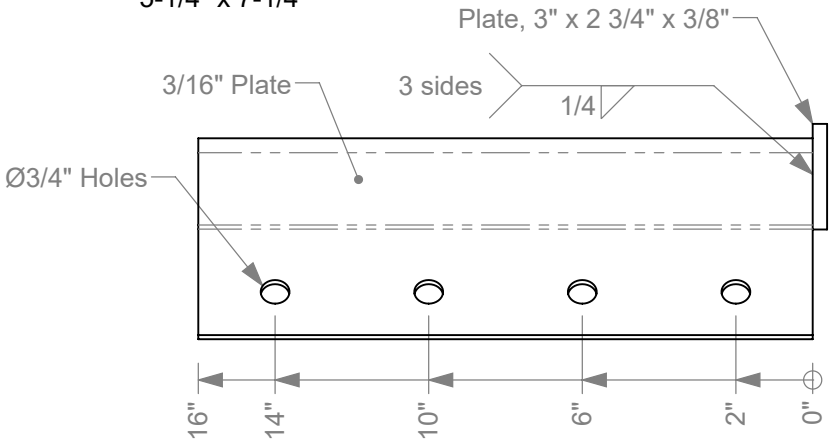

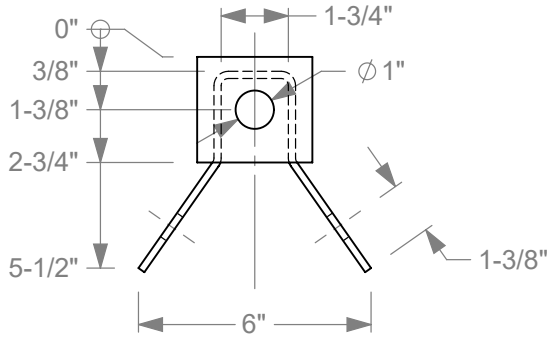

Guardrail Anchor Bracket

Scale 1:5

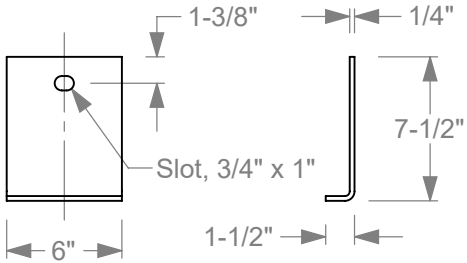

Shelf Angle Bracket

Scale 1:10

Texas A&M Transportation Institute	Roadside Safety and Physical Security Division - Proving Ground	
DAT (Downstream Anchor Terminal)		2019-07-26
Drawn by GES	Scale 1:20	Sheet 2 of 3

T:\Drafting Department\Solidworks\Standard Parts\Guardrail Parts and Subs\Guardrail Drawings\DAT

DAT Parts sheet 2

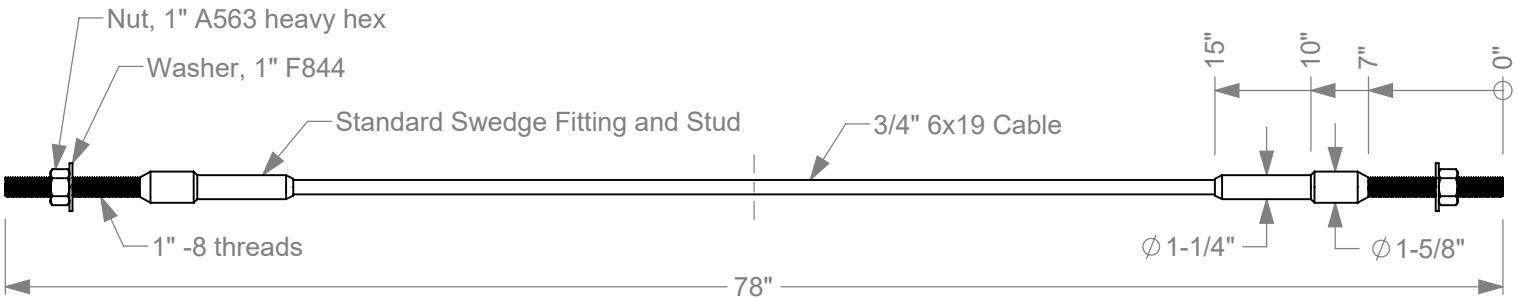

Anchor Cable Assembly

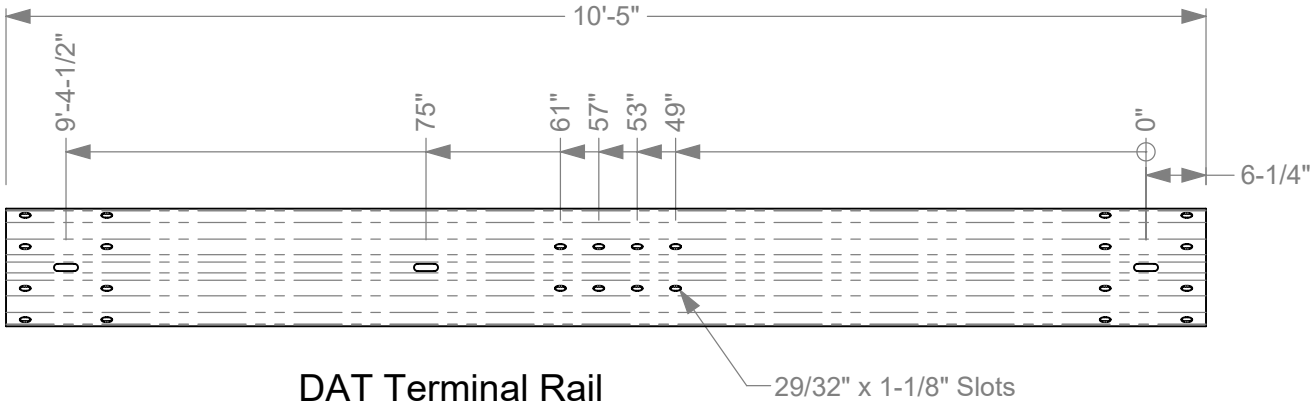

DAT Terminal Rail

Scale 1:20 - See 4-space W-beam Guardrail drawing for cross-section and other dimensions.

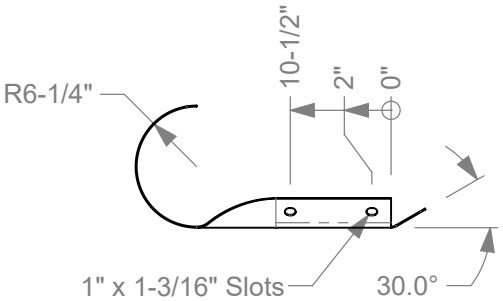

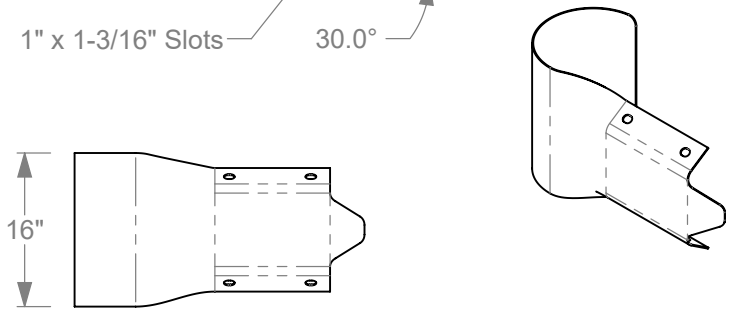

W-beam End Section

12 gauge steel - Scale 1:20

Texas A&M Transportation Institute	Roadside Safety and Physical Security Division - Proving Ground	
DAT (Downstream Anchor Terminal)		2019-07-26
Drawn by GES	Scale 1:10	Sheet 3 of 3

T:\Drafting Department\Solidworks\Standard Parts\Guardrail Parts and Subs\Guardrail Drawings\DAT

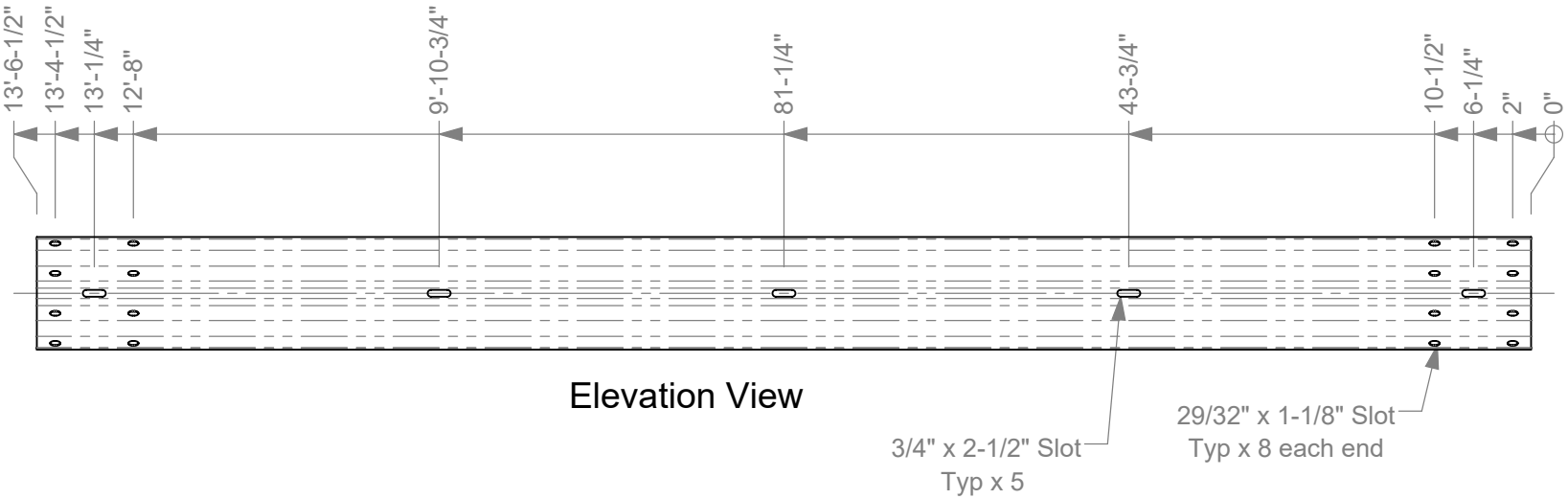

Elevation View

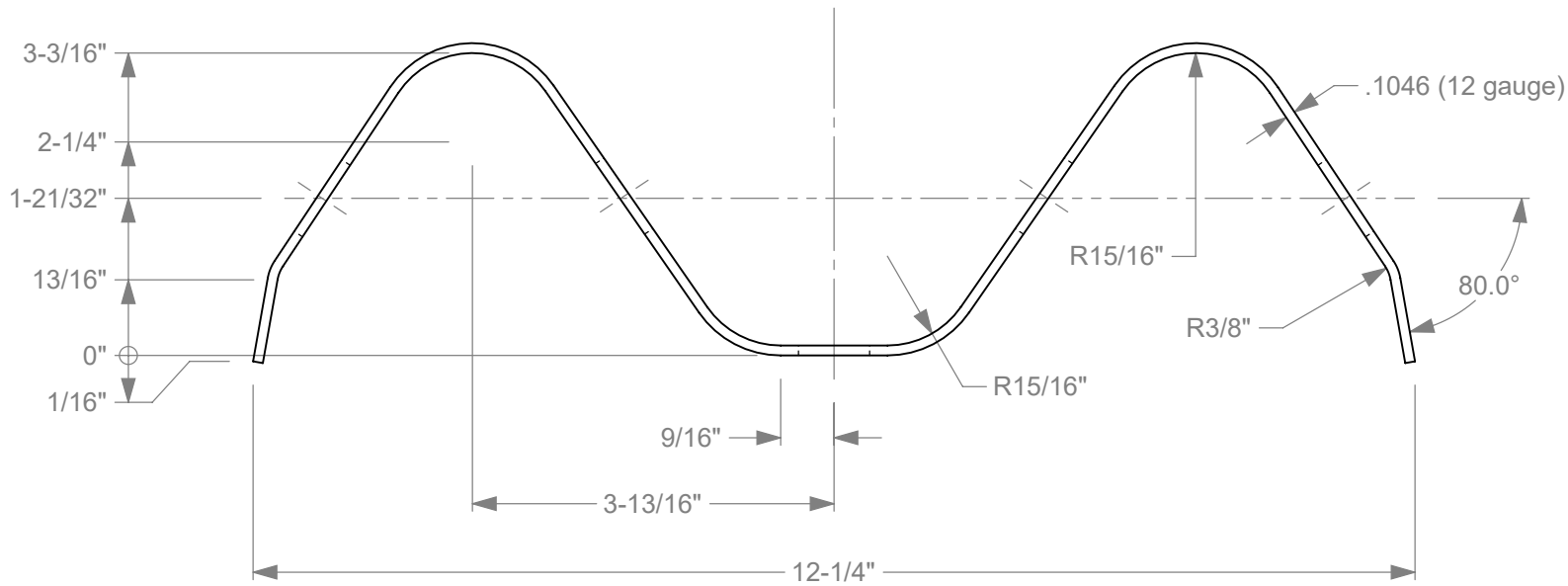

Section View

1a. Maunufacture per AASHTO M180 specifications.

Texas A&M Transportation Institute	Roadside Safety and Physical Security Division - Proving Ground	
4-space W-beam Guardrail		2019-08-26
Drawn by GES	Scale 1:20	Sheet 1 of 1

T:\Drafting Department\Solidworks\Standard Parts\Guardrail Parts and Subs\Guardrail Drawings\W-Beam Guardrail, 4-space

72" Wide-Flange Guardrail Post

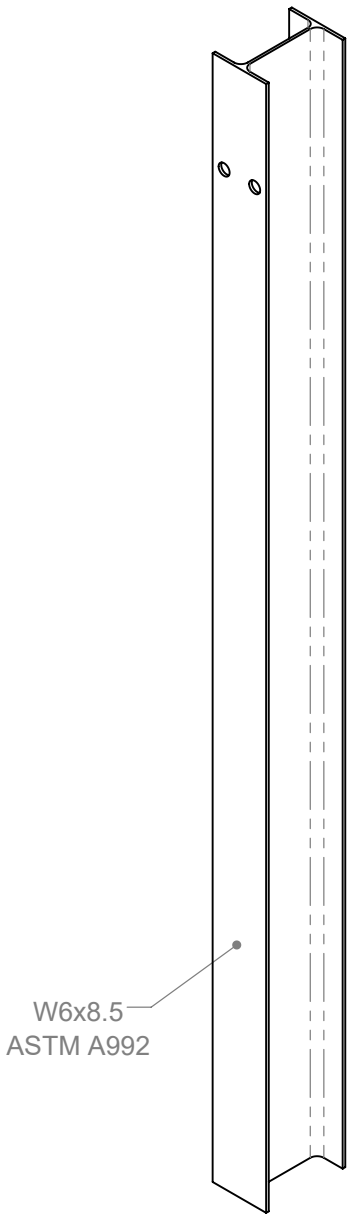

Isometric View

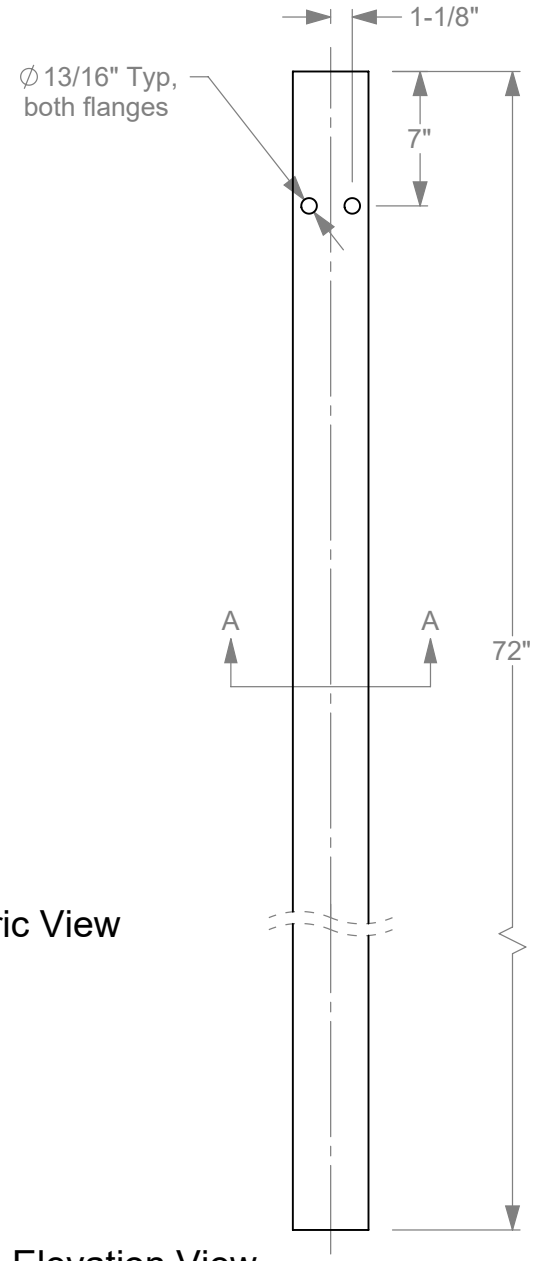

Elevation View

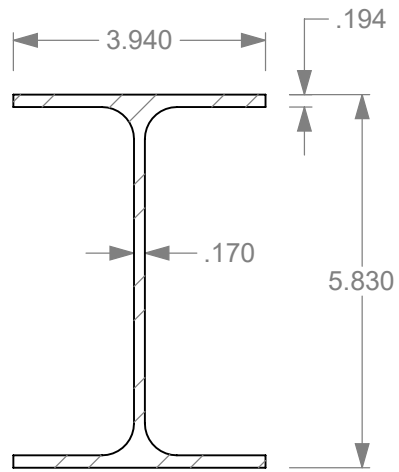

Section A-A

Scale 1 : 3

Texas A&M Transportation Institute	Roadside Safety and Physical Security Division - Proving Ground		
72" Wide-Flange Guardrail Post			2020-01-06
Drawn by GES	Scale 1:10	Sheet 1 of 1	

T:\Drafting Department\Solidworks\Standard Parts\Guardrail Parts and Subs\Guardrail Drawings\Post, 72" Wide Flange Guardrail

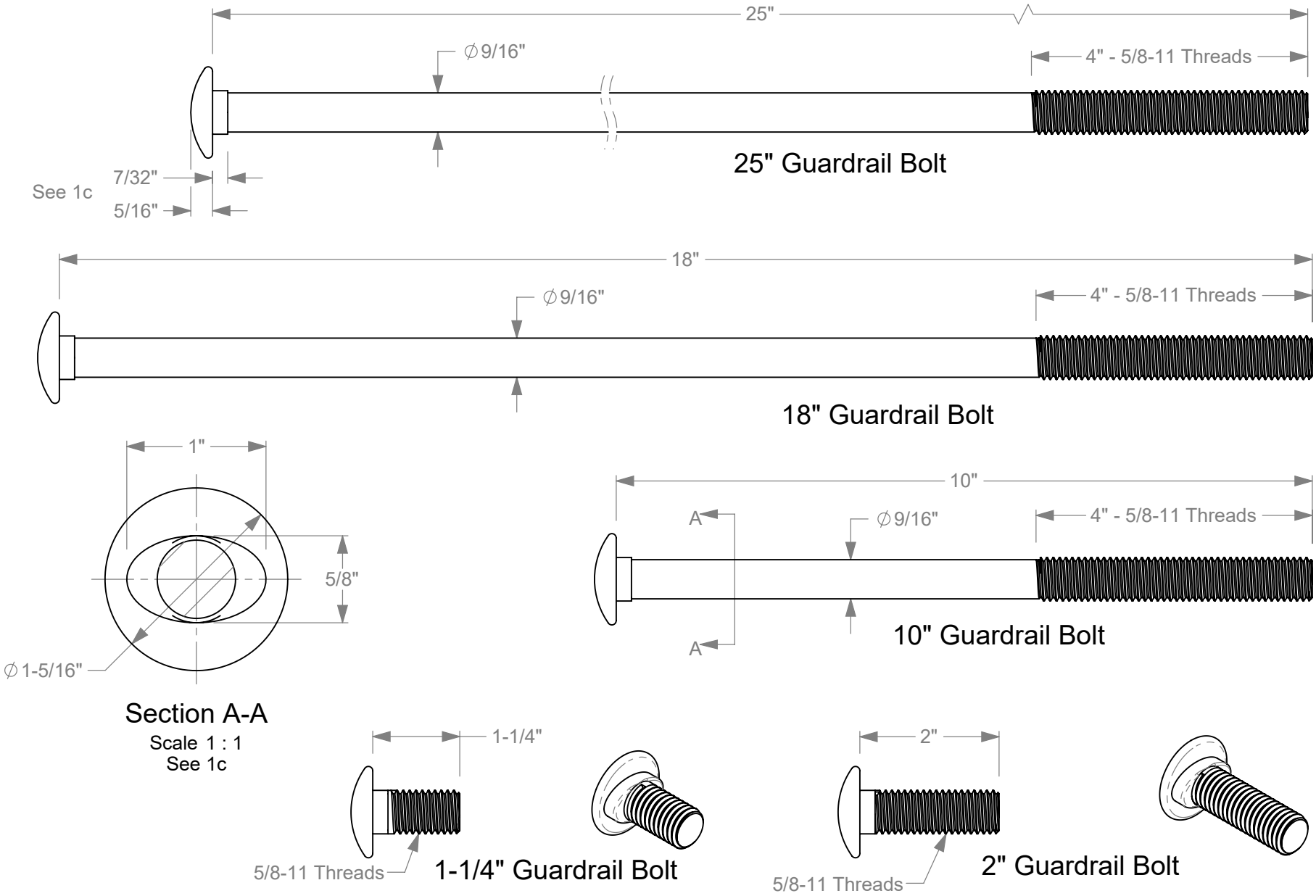

1a. Material is ASTM A307.
1b. All bolt sizes not used in all projects. See system drawing.
1c. Head and shoulder dimensions typical all sizes.

Texas A&M Transportation Institute	Roadside Safety and Physical Security Division - Proving Ground	
Guardrail Bolt		2019-06-27
Drawn by GES	Scale 1:2	Sheet 1 of 1

T:\Drafting Department\Solidworks\Standard Parts\Guardrail Parts and Subs\Guardrail Drawings\Guardrail Bolt

Recessed Guardrail Nut

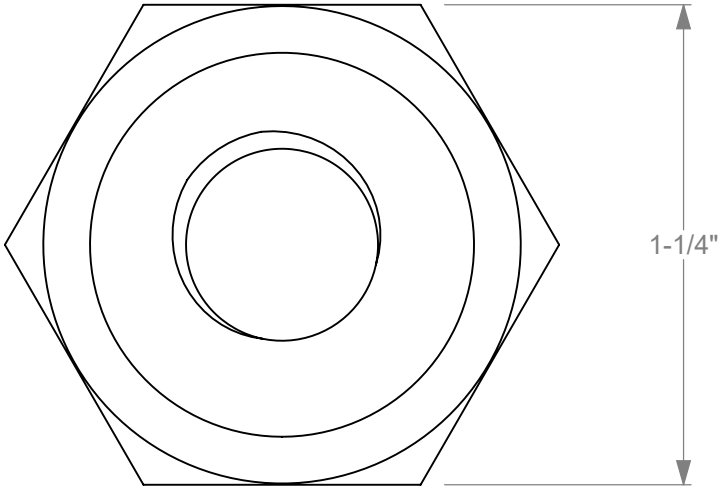

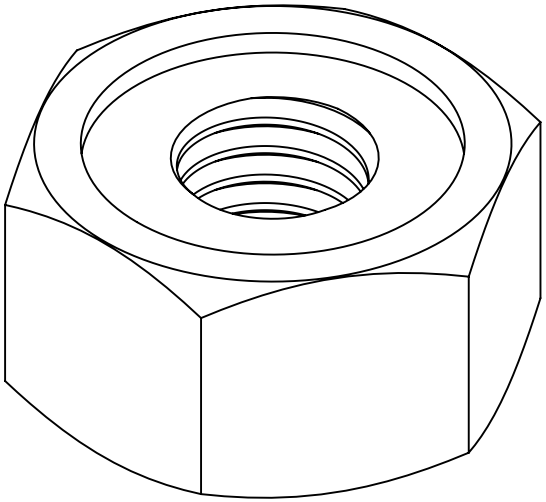

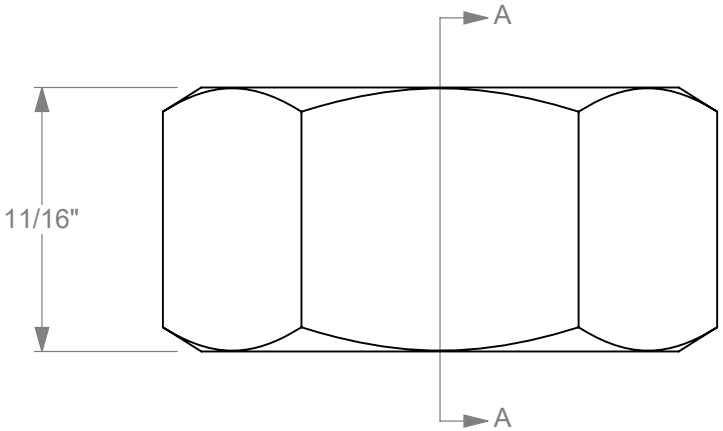

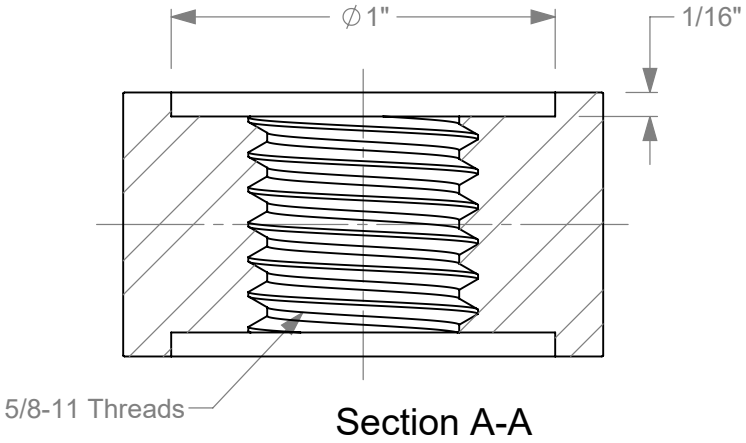

Section A-A

1a. Material is ASTM A 563 Grade A.

Texas A&M Transportation Institute	Roadside Safety and Physical Security Division - Proving Ground	
Recessed Guardrail Nut		2019-06-27
Drawn by GES	Scale 2:1	Sheet 1 of 1

T:\Drafting Department\Solidworks\Standard Parts\Guardrail Parts and Subs\Guardrail Drawings\Nut, Recessed Guardrail