U.S. Department
of Transportation
**Federal Highway
Administration**

November 19, 2019

1200 New Jersey Ave., SE
Washington, D.C. 20590

In Reply Refer To:
HSST-1/WZ-387

Mr John Sandy
Traffic Safety Service, LLC
601 Hadley Road
South Plainfield, NJ 07080

Dear Mr Sandy:

This letter is in response to your August 6, 2019 request for the Federal Highway Administration (FHWA) to review a roadside safety device, hardware, or system for eligibility for reimbursement under the Federal-aid highway program. This FHWA letter of eligibility is assigned FHWA control number WZ-387 and is valid until a subsequent letter is issued by FHWA that expressly references this device.

Decision

The following device is eligible within the length-of-need, with details provided in the form which is attached as an integral part of this letter:

- TSS 590 Water-filled Barrier Channelizer

Scope of this Letter

To be found eligible for Federal-aid funding, new roadside safety devices should meet the crash test and evaluation criteria contained in the American Association of State Highway and Transportation Officials'(AASHTO) Manual for Assessing Safety Hardware (MASH). However, the FHWA, the Department of Transportation, and the United States Government do not regulate the manufacture of roadside safety devices. Eligibility for reimbursement under the Federal-aid highway program does not establish approval, certification or endorsement of the device for any particular purpose or use.

This letter is not a determination by the FHWA, the Department of Transportation, or the United States Government that a vehicle crash involving the device will result in any particular outcome, nor is it a guarantee of the in-service performance of this device. Proper manufacturing, installation, and maintenance are required in order for this device to function as tested.

This finding of eligibility is limited to the crashworthiness of the system and does not cover other structural features, nor conformity with the Manual on Uniform Traffic Control Devices.

Eligibility for Reimbursement

Based solely on a review of crash test results and certifications submitted by the manufacturer, and the crash test laboratory, FHWA agrees that the device described herein meets the crash test and evaluation criteria of the AASHTO's MASH. Therefore, the device is eligible for reimbursement under the Federal-aid highway program if installed under the range of tested conditions.

Name of system: TSS 590 Water-filled Barrier Channelizer
Type of system: Channelizer
Test Level: MASH TL3
Testing conducted by: TamTI
Date of request: August 12, 2019

FHWA concurs with the recommendation of the accredited crash testing laboratory on the attached form

Full Description of the Eligible Device

The device and supporting documentation, including reports of the crash tests or other testing done, videos of any crash testing, and/or drawings of the device, are described in the attached form.

Notice

This eligibility letter is issued for the subject device as tested. Modifications made to the device are not covered by this letter. Any modifications to this device should be submitted to the user (i.e., state DOT) as per their requirements.

You are expected to supply potential users with sufficient information on design, installation and maintenance requirements to ensure proper performance.

You are expected to certify to potential users that the hardware furnished has the same chemistry, mechanical properties, and geometry as that submitted for review, and that it will meet the test and evaluation criteria of AASHTO's MASH.

Issuance of this letter does not convey property rights of any sort or any exclusive privilege. This letter is based on the premise that information and reports submitted by you are accurate and correct. We reserve the right to modify or revoke this letter if: (1) there are any inaccuracies in the information submitted in support of your request for this letter, (2) the qualification testing was flawed, (3) in-service performance or other information reveals safety problems, (4) the system is significantly different from the version that was crash tested, or (5) any other information indicates that the letter was issued in error or otherwise does not reflect full and complete information about the crashworthiness of the system.

Standard Provisions

- To prevent misunderstanding by others, this letter of eligibility designated as FHWA control number WZ-387 shall not be reproduced except in full. This letter and the test documentation upon which it is based are public information. All such letters and documentation may be reviewed upon request.

- This letter shall not be construed as authorization or consent by the FHWA to use, manufacture, or sell any patented system for which the applicant is not the patent holder.

- This FHWA eligibility letter is not an expression of any Agency view, position, or determination of validity, scope, or ownership of any intellectual property rights to a specific device or design. Further, this letter does not impute any distribution or licensing rights to the requester. This FHWA eligibility letter determination is made based solely on the crash-testing information submitted by the requester. The FHWA reserves the right to review and revoke an earlier eligibility determination after receipt of subsequent information related to crash testing.

Sincerely,

Michael S. Griffith

Michael S. Griffith
Director, Office of Safety Technologies
Office of Safety

Enclosures

Request for Federal Aid Reimbursement Eligibility of Highway Safety Hardware

Submitter	Date of Request:	August 06, 2019	◉ New ◯ Resubmission
	Name:	John Sandy	
	Company:	Traffic Safety Service, LLC	
	Address:	601 Hadley Road South Plainfield, NJ 07080	
	Country:	United States of America	
	To:	Michael S. Griffith, Director FHWA, Office of Safety Technologies	

I request the following devices be considered eligible for reimbursement under the Federal-aid highway program.

Device & Testing Criterion - Enter from right to left starting with Test Level

!-!-!

System Type	Submission Type	Device Name / Variant	Testing Criterion	Test Level
'WZ': Crash Worthy Work Zone Traffic Control Devices	◉ Physical Crash Testing ◯ Engineering Analysis	TSS 590 (Water-Filled) Barrier Channelizer	AASHTO MASH	TL3

By submitting this request for review and evaluation by the Federal Highway Administration, I certify that the product(s) was (were) tested in conformity with the AASHTO Manual for Assessing Safety Hardware and that the evaluation results meet the appropriate evaluation criteria in the MASH.

Individual or Organization responsible for the product:

Contact Name:	John Sandy	Same as Submitter ☒
Company Name:	Traffic Safety Service, LLC	Same as Submitter ☒
Address:	601 Hadley Road South Plainfield, NJ 07080	Same as Submitter ☒
Country:	United States of America	Same as Submitter ☒

Enter below all disclosures of financial interests as required by the FHWA `Federal-Aid Reimbursement Eligibility Process for Safety Hardware Devices' document.

Texas A&M Transportation Institute (TTI) was contracted by Traffic Safety Service, LLC to perform full-scale crash testing of the TSS 590 (Water-Filled) Barrier Channelizer. There are no shared financial interests in the TSS 590 (Water-Filled) Barrier Channelizer by TTI, or between Traffic Safety Service, LLC and TTI, other than costs involved in the actual crash tests and reports for this submission to FHWA.

PRODUCT DESCRIPTION

(●) New Hardware or Significant Modification ( ) Modification to Existing Hardware

The test installation was approximately 197 ft-9 inches long, and consisted of 40 water-filled barrier channelizer segments arranged in series and connected with pins. The barrier channelizer segments were free-standing and not pinned/anchored to the pavement. Each segment was 35.43 inches tall, 23.62 inches wide at the base, 7.87 inches wide at top, and 67.32 inches long. The pin-to-pin distance was approximately 59.5 inches. The segment walls were 0.188-inch (nominal) thick, and the barrier channelizer segments and pins were made of HDPE resin.

CRASH TESTING

By signature below, the Engineer affiliated with the testing laboratory, agrees in support of this submission that all of the critical and relevant crash tests for this device listed above were conducted to meet the MASH test criteria. The Engineer has determined that no other crash tests are necessary to determine the device meets the MASH criteria.

Engineer Name:	Roger P. Bligh, Ph.D., P.E.	
Engineer Signature:	DocuSigned by: Roger Bligh DAC0245BADEB436	
Address:	Texas A&M University System, 3135 TAMU, College Station, TX, 77843-3135	Same as Submitter ☐
Country:	United States of America	Same as Submitter ☐

A brief description of each crash test and its result:

Required Test Number	Narrative Description	Evaluation Results
3-90 (1100C)	Test 3-90 involves an 1100C vehicle impacting the TSS 590 (Water-Filled) Barrier Channelizer at a target impact speed of 62 mi/h and target impact angle of 0° to 25°. The selected Critical Impact Angle was 15°, and the target CIP for the left corner of the front bumper was the midspan of the length of the installation (at the joint between segments 20 and 21). The results of the test conducted on April 12, 2019, are found in TTI Test Report No. 690900-TSR1&2 dated June 2019. The test vehicle was traveling at an impact speed of 63.3 mi/h as it made contact with the TSS 590 (Water-Filled) Barrier Channelizer at the midspan of the installation at an impact angle of 14.4°. The TSS 590 Barrier allowed the 1100C vehicle to penetrate the channelizer installation in a controlled manner. The vehicle came to rest 62 ft downstream of the impact point, adjacent to the channelizer installation. Segments of the TSS 590 Barrier were ruptured in the region of the impact. However, the resulting detached elements, fragments, and other debris did not penetrate, or show the potential for penetrating the occupant compartment, or to present undue hazard to others in the area. No occupant compartment deformation or intrusion occurred. The 1100C vehicle remained upright during and after the collision event. Maximum roll and pitch angles were 27° and 17°, respectively. Longitudinal OIV was 27.9 ft/s and lateral OIV was 3.0 ft/s. Maximum longitudinal occupant ridedown acceleration was 6.3 g, and maximum lateral occupant ridedown acceleration was 3.9 g. Occupant risk factors were within the preferred limits specified in MASH. The TSS 590 (Water-Filled) Barrier Channelizer performed acceptably for MASH Test 3-90.	PASS

Required Test Number	Narrative Description	Evaluation Results
3-91 (2270P)	Test 3-91 involves an 2270P vehicle impacting the TSS 590 (Water-Filled) Barrier Channelizer at a target impact speed of 62 mi/h and target impact angle of 0° to 25°. The selected Critical Impact Angle was 15°, and the target CIP for the left corner of the front bumper was the midspan of the length of the installation (at the joint between segments 20 and 21). The results of the test conducted on April 12, 2019, are found in TTI Test Report No. 690900-TSR1&2 dated June 2019. The test vehicle was traveling at an impact speed of 63.3 mi/h as it made contact with the TSS 590 (Water-Filled) Barrier Channelizer at the midspan of the installation at an impact angle of 13.6°. The TSS 590 Barrier allowed the 2270P vehicle to penetrate the channelizer installation in a controlled manner. The vehicle came to rest 107 ft downstream of the impact point, and 60 ft towards the field side. Segments of the TSS 590 Barrier were ruptured in the region of the impact. However, the resulting detached elements, fragments, and other debris did not penetrate, or show the potential for penetrating the occupant compartment, or to present undue hazard to others in the area. No occupant compartment deformation or intrusion occurred. The 2270P vehicle remained upright during and after the collision event. Maximum roll and pitch angles were 55° and 10°, respectively. Longitudinal OIV was 18.7 ft/s and lateral OIV was 1.0 ft/s. Maximum longitudinal occupant ridedown acceleration was 2.7 g, and maximum lateral occupant ridedown acceleration was 6.2 g. Occupant risk factors were within the preferred limits specified in MASH. The TSS 590 (Water-Filled) Barrier Channelizer performed acceptably for MASH Test 3-91.	PASS

Full Scale Crash Testing was done in compliance with MASH by the following accredited crash test laboratory (cite the laboratory's accreditation status as noted in the crash test reports.):

Laboratory Name:	Texas A&M Transportation Institute	
Laboratory Signature:	DocuSigned by: Danell Kuhr D46C225E85D5B4E7...	
Address:	TTI, 3135 TAMU College Station, TX, 77843-3135	Same as Submitter ☐
Country:	United States of America	Same as Submitter ☐
Accreditation Certificate Number and Dates of current Accreditation period :	ISO 17025-2017 Laboratory A2LA Certificate Number 2821.01 Valid To: April 30, 2021	

Submitter Signature*: DocuSigned by: John Sandy 7AAB49C7AB784EB...

Submit Form

ATTACHMENTS

Attach to this form:

1) Additional disclosures of related financial interest as indicated above.
2) A copy of the full test report, video, and a Test Data Summary Sheet for each test conducted in support of this request.
3) A drawing or drawings of the device(s) that conform to the Task Force-13 Drawing Specifications [Hardware Guide Drawing Standards]. For proprietary products, a single isometric line drawing is usually acceptable to illustrate the product, with detailed specifications, intended use, and contact information provided on the reverse. Additional drawings (not in TF-13 format) showing details that are relevant to understanding the dimensions and performance of the device should also be submitted to facilitate our review.

FHWA Official Business Only:

Eligibility Letter		
Number	Date	Key Words

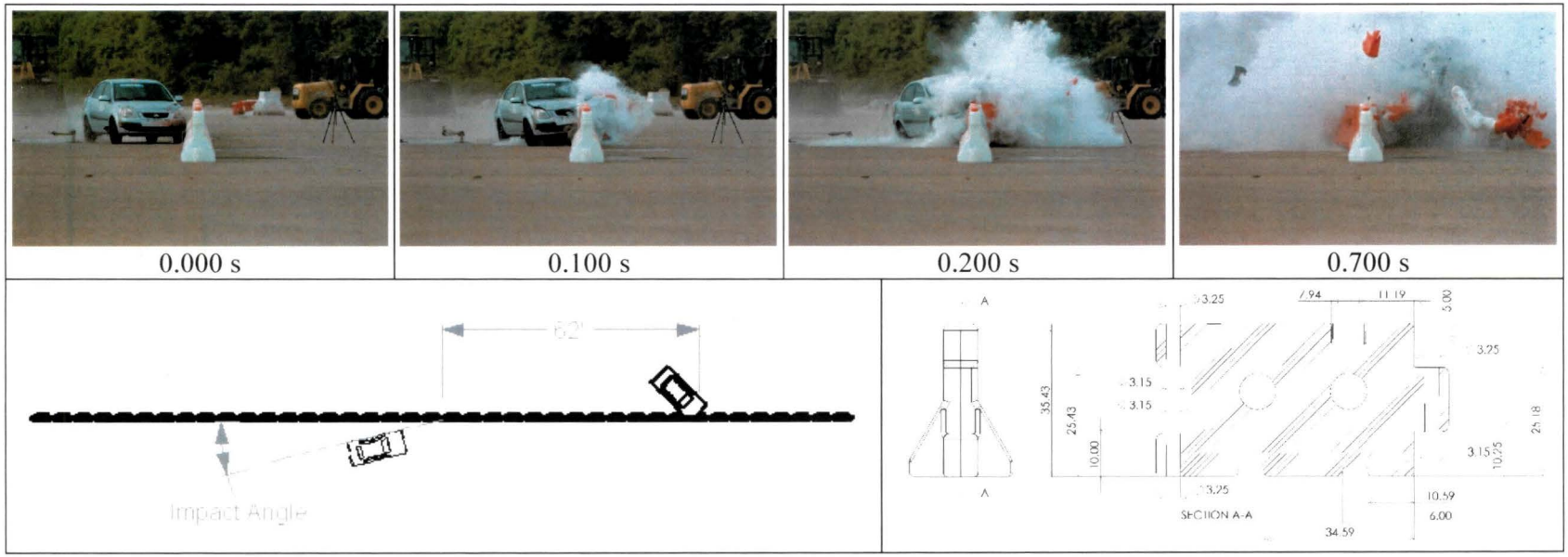

General Information
- Test Agency ..... Texas A&M Transportation Institute (TTI)
- Test Standard Test No. ..... MASH Test 3-90
- TTI Test No. 690900-TSR1
- Test Date 2019-04-12

Test Article
- Type ..... Longitudinal Channelizer
- Name ..... TSS 590 Water-Filled Barrier
- Installation Length ..... 197 ft 9 inches
- Material or Key Elements ... 40 HDPE resin water-filled barrier segments 35.43 inches tall, 23.62 inches wide at the base, 7.87 inches wide at top, 67.32 inches long, 0.188-inch thick walls

Soil Type and Condition ..... Placed on Concrete Surface, Damp

Test Vehicle
- Type/Designation 1100C
- Make and Model ..... 2009 Kia Rio
- Curb ..... 2467 lb
- Test Inertial ..... 2432 lb
- Dummy ..... 165 lb
- Gross Static ..... 2597 lb

Impact Conditions
- Speed ..... 63.3 mi/h
- Angle ..... 14.4°
- Location/Orientation ..... Midspan

Kinetic Energy ..... 326 kip-ft

Exit Conditions
- Speed ..... Not obtainable
- Angle ..... Not obtainable

Occupant Risk Values
- Longitudinal OIV ..... 27.9 ft/s
- Lateral OIV ..... 3.0 ft/s
- Longitudinal Ridedown ..... 6.3 g
- Lateral Ridedown ..... 3.9 g
- THIV ..... 30.8 km/h
- PHD ..... 6.4 g
- ASI 0.63

Max. 0.050-s Average
- Longitudinal ..... -7.5 g
- Lateral ..... 2.1 g
- Vertical ..... -2.9 g

Post-Impact Trajectory
- Stopping Distance ..... 62 ft downstream Adjacent to field side

Vehicle Stability
- Maximum Yaw Angle ..... 40°
- Maximum Pitch Angle ..... 17°
- Maximum Roll Angle ..... 27°

Test Article Deflections
- Dynamic ..... Ruptured
- Permanent ..... Ruptured
- Working Width ..... NA
- Height of Working Width ..... NA

Vehicle Damage
- VDS 12FD5
- CDC 12FDEW3
- Max. Exterior Deformation ..... 6.0 inches
- OCDI FL0000000
- Max. Occupant Compartment Deformation ..... None

Figure 5.6. Summary of Results for *MASH* Test 3-90 on TSS 590 Water-Filled Barrier.

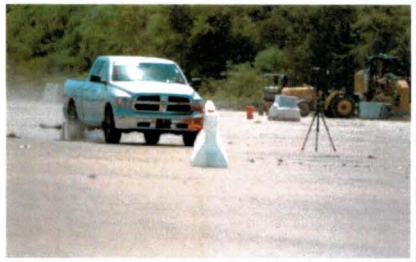
0.000 s


0.100 s


0.200 s


0.700 s

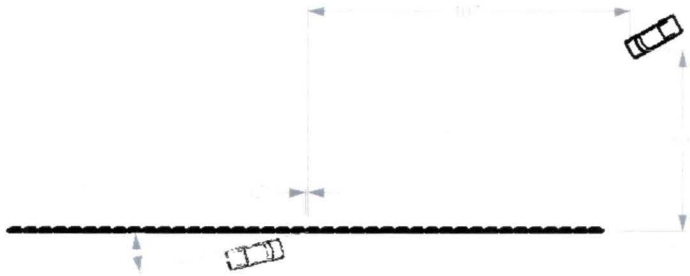

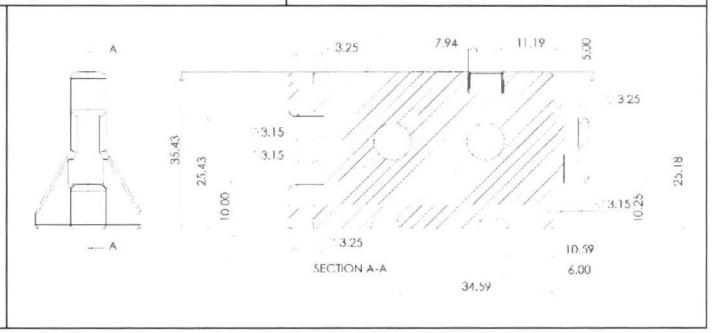

General Information
- Test Agency ..... Texas A&M Transportation Institute (TTI)
- Test Standard Test No. ..... MASH Test 3-91
- TTI Test No. 690900-TSR2
- Test Date 2019-04-12

Test Article
- Type ..... Longitudinal Channelizer
- Name ..... TSS 590 Water-Filled Barrier
- Installation Length ..... 197 ft 9 inches
- Material or Key Elements ... 40 HDPE resin water-filled barrier segments 35.43 inches tall, 23.62 inches wide at the base, 7.87 inches wide at top, 67.32 inches long, 0.188-inch thick walls

Soil Type and Condition ..... Placed on concrete surface, Damp

Test Vehicle
- Type/Designation 2270P
- Make and Model ..... 2015 RAM 1500 pickup truck
- Curb ..... 4776 lb
- Test Inertial ..... 5013 lb
- Dummy ..... No dummy
- Gross Static ..... 5013 lb

Impact Conditions
- Speed ..... 63.3. mi/h
- Angle ..... 13.6°
- Location/Orientation ..... 12 inches dwnstrm of the joint 20-21

Kinetic Energy ..... 671 kip-ft

Exit Conditions
- Speed ..... Not obtainable
- Angle ..... Not obtainable

Occupant Risk Values
- Longitudinal OIV ..... 18.7 ft/s
- Lateral OIV ..... 1.0 ft/s
- Longitudinal Ridedown ..... 2.7 g
- Lateral Ridedown ..... 6.2 g
- THIV ..... 20.7 km/h
- PHD ..... 6.4 g
- ASI 0.46

Max. 0.050-s Average
- Longitudinal ..... -3.4 g
- Lateral ..... 3.0 g
- Vertical ..... -4.2 g

Post-Impact Trajectory
- Stopping Distance ..... 107 ft downstream 60 ft twd field side

Vehicle Stability
- Maximum Yaw Angle ..... 36°
- Maximum Pitch Angle ..... 10°
- Maximum Roll Angle ..... 55°

Test Article Deflections
- Dynamic ..... Ruptured
- Permanent ..... Ruptured
- Working Width ..... NA
- Height of Working Width ..... NA

Vehicle Damage
- VDS 11LFQ3
- CDC 11FLEW3
- Max. Exterior Deformation ..... 11.0 inches
- OCDI FL0000000
- Max. Occupant Compartment Deformation ..... None

Figure 6.6. Summary of Results for *MASH* Test 3-91 on TSS 590 Water-Filled Barrier.

NOTES:

1. MATERIAL WEIGHT OF BASE MOLDED IN ORANGE HDPE RESIN IS 50.0 POUNDS.
2. ALL PART DIMENSIONS WILL BE HELD TO A TOLERANCE OF +/- 1.5%.
3. THE SURFACE FLATNESS OF ALL PARTS WILL BE HELD TO +/- 0.125"/LINEAR FOOT.
4. ALL PARTS TO HAVE A NOMINAL WALL THICKNESS OF 0.188", BUT HELD TO A TOLERANCE OF +/- 20%.
5. ALL PARTING LINE FLASH WILL BE TRIMMED TO NO MORE THAN 0.032".
6. DIMENSIONS NOT SHOWN ARE TO BE PER THE 3D CAD MODEL "Barrier 2 and knuckle #13" .

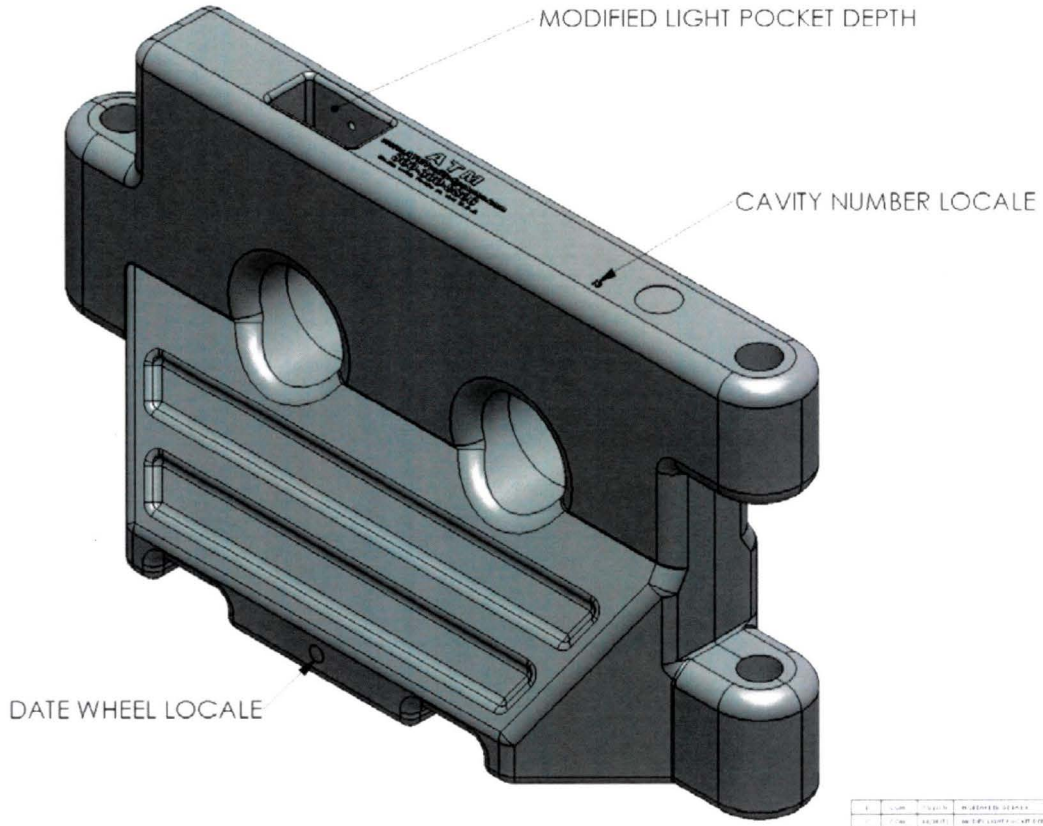

TSS
www.TrafficSafetyService.com

TSS 590 BARRIER

C

13