U.S. Department
of Transportation
Federal Highway
Administration

1200 New Jersey Ave., SE
Washington, D.C. 20590

MAR 0 6 2019

In Reply Refer To:
HSST-1 / CC-152

Mr. Frederick Mauer
Gregory Industries
4100 13th Street, SW
Canton, OH. 44710

Dear Mr. Mauer:

This letter is in response to your November 2, 2018 request for the Federal Highway Administration (FHWA) to review a roadside safety device, hardware, or system for eligibility for reimbursement under the Federal-aid highway program. This FHWA letter of eligibility is assigned FHWA control number CC-152 and is valid until a subsequent letter is issued by FHWA that expressly references this device.

Decision

The following device is eligible within the length-of-need, with details provided in the form which is attached as an integral part of this letter:

- Truck Tailor Mounted Attenuator - 200

Scope of this Letter

To be found eligible for Federal-aid funding, new roadside safety devices should meet the crash test and evaluation criteria contained in the American Association of State Highway and Transportation Officials'(AASHTO) Manual for Assessing Safety Hardware (MASH). However, the FHWA, the Department of Transportation, and the United States Government do not regulate the manufacture of roadside safety devices. Eligibility for reimbursement under the Federal-aid highway program does not establish approval, certification or endorsement of the device for any particular purpose or use.

This letter is not a determination by the FHWA, the Department of Transportation, or the United States Government that a vehicle crash involving the device will result in any particular outcome, nor is it a guarantee of the in-service performance of this device. Proper manufacturing, installation, and maintenance are required in order for this device to function as tested.

This finding of eligibility is limited to the crashworthiness of the system and does not cover other structural features, nor conformity with the Manual on Uniform Traffic Control Devices.

Eligibility for Reimbursement

Based solely on a review of crash test results and certifications submitted by the manufacturer, and the crash test laboratory, FHWA agrees that the device described herein meets the crash test and evaluation criteria of the AASHTO's MASH. Therefore, the device is eligible for reimbursement under the Federal-aid highway program if installed under the range of tested conditions.

Name of system: Truck Tailor Mounted Attenuator - 200
Type of system: Attenuator
Test Level: MASH Test Level 3 (TL3)
Testing conducted by: Applus IDIADA KARCO Engineering
Date of request: November 2, 2018

FHWA concurs with the recommendation of the accredited crash testing laboratory on the attached form.

Full Description of the Eligible Device

The device and supporting documentation, including reports of the crash tests or other testing done, videos of any crash testing, and/or drawings of the device, are described in the attached form.

Notice

This eligibility letter is issued for the subject device as tested. Modifications made to the device are not covered by this letter. Any modifications to this device should be submitted to the user (i.e., state DOT) as per their requirements.

You are expected to supply potential users with sufficient information on design, installation and maintenance requirements to ensure proper performance.

You are expected to certify to potential users that the hardware furnished has the same chemistry, mechanical properties, and geometry as that submitted for review, and that it will meet the test and evaluation criteria of AASHTO's MASH.

Issuance of this letter does not convey property rights of any sort or any exclusive privilege. This letter is based on the premise that information and reports submitted by you are accurate and correct. We reserve the right to modify or revoke this letter if: (1) there are any inaccuracies in the information submitted in support of your request for this letter, (2) the qualification testing was flawed, (3) in-service performance or other information reveals safety problems, (4) the system is significantly different from the version that was crash tested, or (5) any other information indicates that the letter was issued in error or otherwise does not reflect full and complete information about the crashworthiness of the system.

Standard Provisions

- To prevent misunderstanding by others, this letter of eligibility designated as FHWA control number CC-152 shall not be reproduced except in full. This letter and the test documentation upon which it is based are public information. All such letters and documentation may be reviewed upon request.

- This letter shall not be construed as authorization or consent by the FHWA to use, manufacture, or sell any patented system for which the applicant is not the patent holder.

- This FHWA eligibility letter is not an expression of any Agency view, position, or determination of validity, scope, or ownership of any intellectual property rights to a specific device or design. Further, this letter does not impute any distribution or licensing rights to the requester. This FHWA eligibility letter determination is made based solely on the crash-testing information submitted by the requester. The FHWA reserves the right to review and revoke an earlier eligibility determination after receipt of subsequent information related to crash testing.

- If the subject device is a patented product it may be considered to be proprietary. If proprietary systems are specified by a highway agency for use on Federal-aid projects: (a) they must be supplied through competitive bidding with equally suitable unpatented items; (b) the highway agency must certify that they are essential for synchronization with the existing highway facilities or that no equally suitable alternative exists; or (c) they must be used for research or for a distinctive type of construction on relatively short sections of road for experimental purposes. Our regulations concerning proprietary products are contained in Title 23, Code of Federal Regulations, Section 635.411.

Sincerely,

Michael S. Griffith

Michael S. Griffith
Director, Office of Safety Technologies
Office of Safety

Enclosures

Request for Federal Aid Reimbursement Eligibility of Highway Safety Hardware

Submitter	Date of Request:	January 30, 2019	◉ New ◯ Resubmission
	Name:	Robert Ramirez	
	Company:	Applus IDIADA KARCO Engineering	
	Address:	9270 Holly Rd. Adelanto, CA 92301	
	Country:	United States	
	To:	Michael S. Griffith, Director FHWA, Office of Safety Technologies	

I request the following devices be considered eligible for reimbursement under the Federal-aid highway program.

Device & Testing Criterion - Enter from right to left starting with Test Level

!-!-!

System Type	Submission Type	Device Name / Variant	Testing Criterion	Test Level
'CC': Truck-Mounted Attenuators (TMA)	◉ Physical Crash Testing ◯ Engineering Analysis	TTMA-200	AASHTO MASH	TL3

By submitting this request for review and evaluation by the Federal Highway Administration, I certify that the product(s) was (were) tested in conformity with the AASHTO Manual for Assessing Safety Hardware and that the evaluation results meet the appropriate evaluation criteria in the MASH.

Individual or Organization responsible for the product:

Contact Name:	Frederick Mauer	Same as Submitter ☐
Company Name:	Gregory Industries	Same as Submitter ☐
Address:	4100 13th Street SW Canton OH 44710	Same as Submitter ☐
Country:	USA	Same as Submitter ☐

Enter below all disclosures of financial interests as required by the FHWA `Federal-Aid Reimbursement Eligibility Process for Safety Hardware Devices' document.

Gregory Industries and Applus IDIADA KARCO Engineering LLC share no financial interests between the two organizations. This includes no shared financial interest but not limited to:
i. Compensation including wages, salaries, commissions, professional fees, or fees for business referrals
iii. Research funding or other forms of research support;
iv. Patents, copyrights, licenses, and other intellectual property interests;
vi. Business ownership and investment interests;

PRODUCT DESCRIPTION

(•) New Hardware or Significant Modification ( ) Modification to Existing Hardware

The TTMA-200 is trailer attenuator designed to dissipate the kinetic energy of an impacting vehicle to reduce the severity of a crash. As the impact head and mandrel are pushed forward into the first tube, the tapered mandrel bursts the first tube at the corners into four (4) straps. The bursting of the first tube dissipates the kinetic energy of the impacting vehicle. The trailer attenuator has a length of 23.6ft (7.2 m) with an optional hitch extension its total tested length was 24.9 ft. (7.6 m) and a max width of 8.0 ft. (2.4 m). The TTMA-200 is supported by a wheel and axle assembly and is attached to the support truck with a lunette ring.

All testing of the TTMA-200 was conducted with an optional 4.0 ft. x 8.0 ft. (1.2 m x 2.4 m) arrow board and arrow board frame that attached to the trailer frame assembly. The arrow board frame was attached to the trailer frame assembly with two (2) 5/8" grade 5 bolts and six (6) 1/2" grade 5 bolts. The arrow board was secured to the arrow board frame with five (5) 3/8" grade 5 bolts. An optional 16.0 in. (406 mm) hitch extension bolted to the trailer frame assembly with four (4) 5/8" grade 5 bolts. The TTMA-200 lunette ring was inserted into a standard 8-ton pintle hitch mounted on the support truck at a height of 19.5 in. (495 mm). Complete detail of the assemblies can be found in the manufacturer's drawings.

CRASH TESTING

By signature below, the Engineer affiliated with the testing laboratory, agrees in support of this submission that all of the critical and relevant crash tests for this device listed above were conducted to meet the MASH test criteria. The Engineer has determined that no other crash tests are necessary to determine the device meets the MASH criteria.

Engineer Name:	Robert Ramirez	
Engineer Signature:	Robert Ramirez — Digitally signed by Robert Ramirez DN: cn=Robert Ramirez, o=KARCO Engineering, ou=Project Engineer, email=rramirez@karco.com, c=US Date: 2018.11.02 11:47:20 -07'00'	
Address:	9270 Holly Rd. Adelanto, CA 92301	Same as Submitter ☐
Country:	United States	Same as Submitter ☐

A brief description of each crash test and its result:

Required Test Number	Narrative Description	Evaluation Results
3-50 (1100C)	IDIADA KARCO Test Number P38077-01. An 1100C test vehicle impacting the TTMA-200 at a nominal impact speed and angle of 62 mph and 0°, respectively. The primary intent of this test is to evaluate the impact performance of the TTMA-200 during small car impacts. The support vehicle was blocked against forward movement. The support vehicle was also placed in second gear with the parking brake engaged and the front wheels were centered with no steering angle. The test vehicle, 2012 Kia Rio impacted the TTMA-200 at a speed and angle of 61.94 mph (99.68 km/h) and 0.2°. The TTMA-200 brought the vehicle to a controlled stop. There was no penetration into the occupant compartment and the deformation limits were not exceeded. The Occupant Impact Velocities (OIV) in the longitudinal and lateral directions were 32.5 ft/s (9.9 m/s) and 0.3 ft/s (0.1 m/s), respectively. The Ridedown acceleration in the longitudinal and lateral directions were -15.2 g and 3.6 g, respectively. The TTMA-200 met all the requirements for MASH Test 3-50.	PASS
3-51 (2270P)	IDIADA KARCO Test Number P38076-01. An 2270P test vehicle impacting the TTMA-200 at a nominal impact speed and angle of 62 mph and 0°, respectively. The primary intent of this test is to evaluate the energy dissipation capacity of the TTMA-200, structural adequacy and occupant risk. The support vehicle was blocked against forward movement. The support vehicle was also placed in second gear with the parking brake engaged and the front wheels were centered with no steering angle. The test vehicle, 2012 RAM 1500 impacted the TTMA-200 at a speed and angle of 64.11 mph (103.18 km/h) and 0.3°. The TTMA-200 brought the vehicle to a controlled stop. There was no penetration into the occupant compartment and the deformation limits were not exceeded. The Occupant Impact Velocities (OIV) in the longitudinal and lateral directions were 29.2 ft/s (8.9 m/s) and 0.7 ft/s (0.2 m/s), respectively. The Ridedown acceleration in the longitudinal and lateral directions were -14.9 g and -3.1 g, respectively. All the occupant risk values were below the preferred values in MASH. The TTMA-200 met all the requirements for MASH Test 3-51.	PASS

Required Test Number	Narrative Description	Evaluation Results
3-52 (2270P)	IDIADA KARCO Test Number P38078-01. An 2270P test vehicle impacting the TTMA-200 offset 1/3 the vehicles overall width at a nominal impact speed and angle of 62 mph and 0°, respectively. The primary intent of this test is to evaluate structural adequacy and occupant risk. The support vehicle was blocked against forward and lateral movement. The support vehicle was also placed in second gear with the parking brake engaged and the front wheels were centered with no steering angle. The test vehicle, 2013 RAM 1500 impacted the TTMA-200 at a speed and angle of 62.99 mph (101.37 km/h) and 0.1°. The TTMA-200 brought the vehicle to a controlled stop. There was no penetration into the occupant compartment and the deformation limits were not exceeded. The Occupant Impact Velocities (OIV) in the longitudinal and lateral directions were 28.2 ft/s (8.6 m/s) and 2.0 ft/s (0.6 m/s), respectively. The Ridedown acceleration in the longitudinal and lateral directions were -16.4 g and 2.5 g, respectively. The TTMA-200 met all the requirements for MASH Test 3-52.	PASS
3-53 (2270P)	IDIADA KARCO Test Number P38075-02. An 2270P test vehicle impacting the TTMA-200 offset 1/4 the vehicles overall width at a nominal impact speed and angle of 62 mph and 10°, respectively. The primary intent of this test is to evaluate structural adequacy and occupant risk. The support truck weighed 10,337 lbs and was tested with the parking brake engaged, transmission placed in second gear and the front wheels centered with no steering angle. The test vehicle, 2012 RAM 1500 impacted the TTMA-200 at a speed and angle of 63.49 mph (102.18 km/h) and 10.1°. The TTMA-200 brought the vehicle to a controlled stop. There was no penetration into the occupant compartment and the deformation limits were not exceeded. The Occupant Impact Velocities (OIV) in the longitudinal and lateral directions were 26.6 ft/s (8.1 m/s) and 1.3 ft/s (0.4 m/s), respectively. The Ridedown acceleration in the longitudinal and lateral directions were -9.8 g and -4.0 g, respectively. The support vehicle had a maximum roll ahead measurement 34.8 ft. (10.6 m). The TTMA-200 met all the requirements for MASH Test 3-53.	PASS
3-54 (1500A)	Per MASH this test is optional	Non-Relevant Test, not conducted

Full Scale Crash Testing was done in compliance with MASH by the following accredited crash test laboratory (cite the laboratory's accreditation status as noted in the crash test reports.):

Laboratory Name:	Applus IDIADA KARCO Engineering	
Laboratory Signature:	AB Digitally signed by Alex Beltran DN: cn=Alex Beltran, o=KARCO Engineering, ou=Testing Laboratory, email=abeltran@karco.com, c=US Date: 2018.11.02 11:57:28 -07'00'	
Address:	9270 Holly Rd. Adelanto, CA. 92301	Same as Submitter ☐
Country:	United States	Same as Submitter ☐
Accreditation Certificate Number and Dates of current Accreditation period :	TL-371 Valid through July 1, 2019.	

Submitter Signature*: Robert Ramirez Digitally signed by Robert Ramirez DN: cn=Robert Ramirez, o=KARCO Engineering, ou=Project Engineer, email=rramirez@karco.com, c=US Date: 2018.11.02 12:04:17 -07'00'

Submit Form

ATTACHMENTS

Attach to this form:

1) Additional disclosures of related financial interest as indicated above.
2) A copy of the full test report, video, and a Test Data Summary Sheet for each test conducted in support of this request.
3) A drawing or drawings of the device(s) that conform to the Task Force-13 Drawing Specifications [Hardware Guide Drawing Standards]. For proprietary products, a single isometric line drawing is usually acceptable to illustrate the product, with detailed specifications, intended use, and contact information provided on the reverse. Additional drawings (not in TF-13 format) showing details that are relevant to understanding the dimensions and performance of the device should also be submitted to facilitate our review.

FHWA Official Business Only:

Eligibility Letter		
Number	Date	Key Words

MASH 2016 Test 3-50 Summary

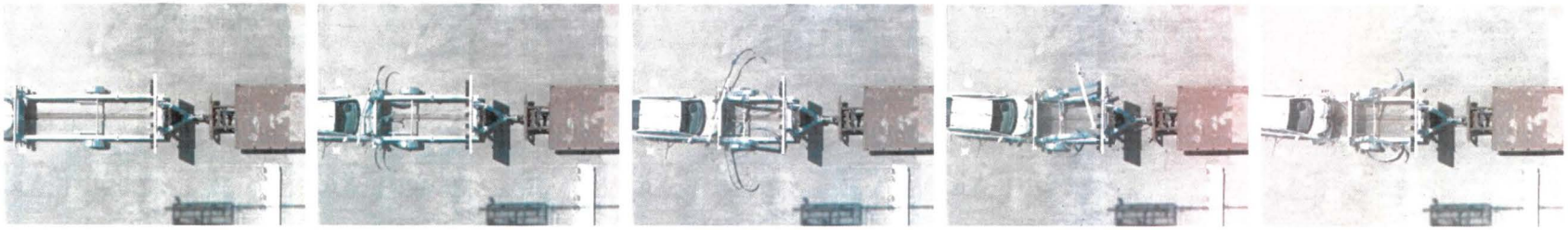

0.000 s | 0.100 s | 0.200 s | 0.500 s | 1.250 s

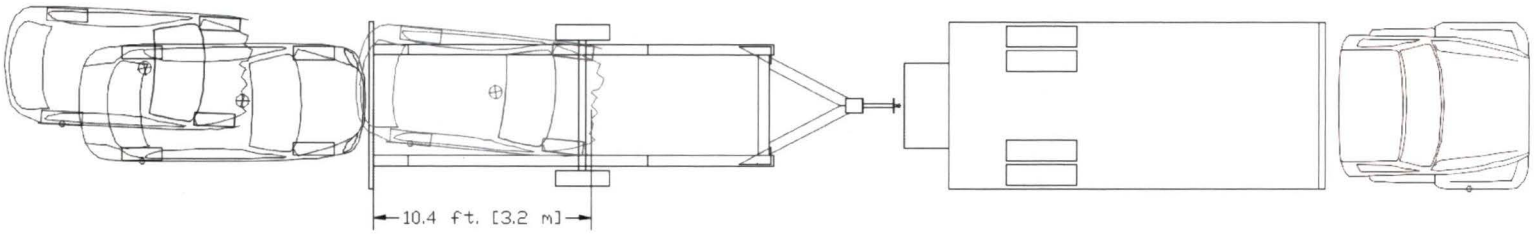

GENERAL INFORMATION	
Test Agency	KARCO Engineering, LLC.
KARCO Test No	P38077-01
Test Designation	3-50
Test Date	07/25/18
TEST ARTICLE	
Name / Model	TTMA200
Type	Trailer Mounted Attenuator
Support Vehicle Length	25.0 ft. (7.6 m)
TMA Length	24.9 ft. (7.6 m)
Road Surface	Concrete
Support Vehicle Restraint	Blocked Against Roll Ahead
TEST VEHICLE	
Type / Designation	1100C
Year, Make, and Model	2012 Kia Rio
Curb Mass	2,355.6 lbs (1,068.5 kg)
Test Inertial Mass	2,457.0 lbs (1,114.5 kg)
Gross Static Mass	2,623.5 lbs (1,190.0 kg)

Impact Conditions	
Impact Velocity	61.94 mph (99.68 km/h)
Impact Angle	0.2°
Location / Orientation	0.8 in. Right of CL
Kinetic Energy	315.1 kip-ft (427.3 kJ)
Exit Conditions	
Exit Velocity	N/A
Exit Angle	N/A
Final Vehicle Position	4.7 ft. (1.4 m) Upstream 1.6 ft. (0.5 m) left
Exit Box Criteria Met	N/A
Vehicle Snagging	None
Vehicle Pocketing	None
Vehicle Stability	Satisfactory
Maximum Roll Angle	4.3 °
Maximum Pitch Angle	5.0 °
Maximum Yaw Angle	-4.7 °

Occupant Risk	
Longitudinal OIV	32.5 ft/s (9.9 m/s)
Lateral OIV	0.3 ft/s (0.1 m/s)
Longitudinal RA	-15.2 g
Lateral RA	3.6 g
THIV	32.5 ft/s (9.9 m/s)
PHD	15.2 g
ASI	1.40
Test Article Deflections	
Static	4.1 ft. (1.2 m)
Dynamic	6.4 ft. (2.0 m)
Working Width	14.0 ft. (4.3 m)
Debris Field	1.0 ft. (0.3 m) Upstream 1.4 ft. (0.4 m) Left
Vehicle Damage	
Vehicle Damage Scale	12-FD-4
CDC	12FDEW2
Maximum Intrusion	0.4 in. (10 mm)

Figure 4 Summary of Test 3-50

MASH 2016 Test 3-51 Summary

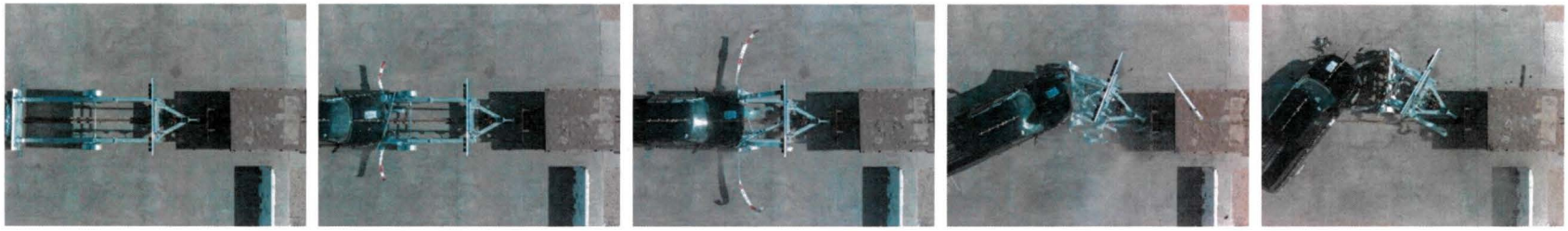

0.000 s | 0.100 s | 0.200 s | 0.525 s | 1.300 s

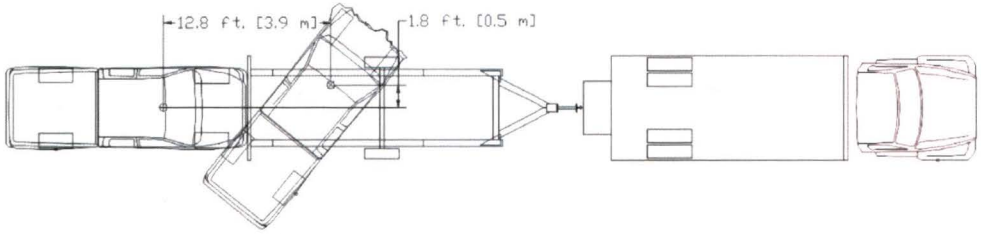

GENERAL INFORMATION	
Test Agency	KARCO Engineering, LLC.
KARCO Test No	P38076-01
Test Designation	3-51
Test Date	07/25/18
TEST ARTICLE	
Name / Model	TTMA-200
Type	Trailer Mounted Attenuator
Support Vehicle Length	25.0 ft. (7.6 m)
TMA Length	24.9 ft. (7.6 m)
Road Surface	Concrete
Support Vehicle Restraint	Blocked Against Roll Ahead
TEST VEHICLE	
Type / Designation	2270P
Year, Make, and Model	2012 RAM 1500
Curb Mass	4,987.9 lbs (2,262.5 kg)
Test Inertial Mass	4,989.0 lbs (2,263.0 kg)
Gross Static Mass	4,989.0 lbs (2,263.0 kg)

Impact Conditions	
Impact Velocity	64.11 mph (103.18 km/h)
Impact Angle	0.3°
Location / Orientation	1.0 in. (25 mm) Right of TMA CL
Kinetic Energy	685.5 kip-ft (929.4 kJ)
Exit Conditions	
Exit Velocity	N/A
Exit Angle	N/A
Final Vehicle Position	12.8 ft. (3.9 m) Downstream 1.8 ft. (0.5 m) Left
Exit Box Criteria Met	N/A
Vehicle Snagging	None
Vehicle Pocketing	None
Vehicle Stability	Satisfactory
Maximum Roll Angle	-2.5 °
Maximum Pitch Angle	10.7 °
Maximum Yaw Angle	48.8 °

Occupant Risk	
Longitudinal OIV	29.2 ft/s (8.9 m/s)
Lateral OIV	0.7 ft/s (0.2 m/s)
Longitudinal RA	-14.9 g
Lateral RA	-3.1 g
THIV	29.2 ft/s (8.9 m/s)
PHD	14.9 g
ASI	0.97
Test Article Deflections	
Static	5.1 ft. (1.6 m)
Dynamic	10.8 ft. (3.3 m)
Working Width	17.8 ft. (5.4 m)
Debris Field	67.2 ft. (20.5 m) Downstream 4.0 ft. (1.2 m) Left
Vehicle Damage	
Vehicle Damage Scale	12-FD-4
CDC	12FDEW2
Maximum Intrusion	Negligible

Figure 4 Summary of Test 3-51

MASH 2016 Test 3-52 Summary

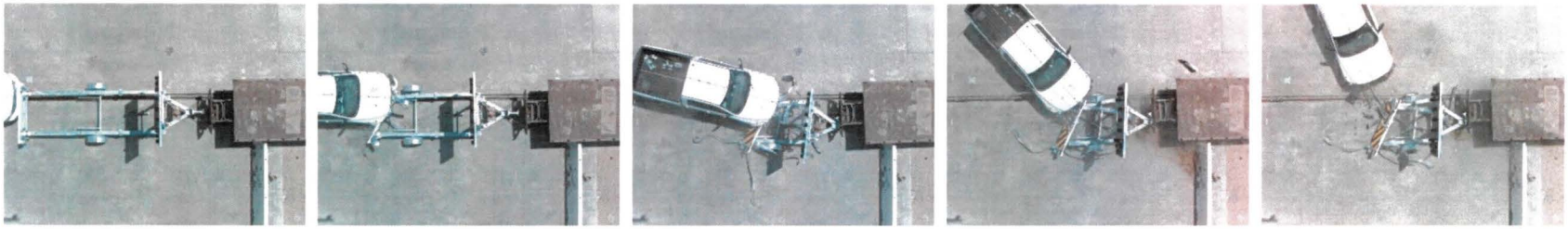

0.000 s | 0.100 s | 0.325 s | 0.700 s | 1.250 s

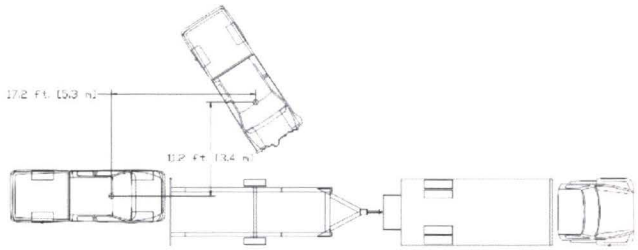

GENERAL INFORMATION

Test Agency	KARCO Engineering, LLC.
KARCO Test No	P38078-01
Test Designation	3-52
Test Date	07/26/18

TEST ARTICLE

Name / Model	TTMA-200
Type	Trailer Mounted Attenuator
Support Vehicle Length	25.0 ft. (7.6 m)
TMA Length	24.9 ft. (7.6 m)
Road Surface	Concrete
Support Vehicle Restraint	Rigidly Blocked

TEST VEHICLE

Type / Designation	2270P
Year, Make, and Model	2013 RAM 1500
Curb Mass	4,990.1 lbs (2,263.5 kg)
Test Inertial Mass	5,009.9 lbs (2,272.5 kg)
Gross Static Mass	5,009.9 lbs (2,272.5 kg)

Impact Conditions

Impact Velocity	62.99 mph (101.37 km/h)
Impact Angle	0.1°
Location / Orientation	26.7 in. (678 mm) Left of TMA CL
Kinetic Energy	623.0 kip-ft (844.7 kJ)

Exit Conditions

Exit Velocity	N/A
Exit Angle	N/A
Final Vehicle Position	17.2 ft. (5.2 m) Downstream 11.2 ft. (3.4 m) Left
Exit Box Criteria Met	N/A
Vehicle Snagging	None
Vehicle Pocketing	None
Vehicle Stability	Satisfactory
Maximum Roll Angle	5.4 °
Maximum Pitch Angle	7.6 °
Maximum Yaw Angle	-68.2 °

Occupant Risk

Longitudinal OIV	28.2 ft/s (8.6 m/s)
Lateral OIV	2.0 ft/s (0.6 m/s)
Longitudinal RA	-16.4 g
Lateral RA	2.5 g
THIV	28.2 ft/s (8.6 m/s)
PHD	16.5 g
ASI	0.96

Test Article Deflections

Static	4.1 ft. (1.2 m)
Dynamic	11.1 ft. (3.4 m)
Working Width	16.4 ft. (5.0 m)
Debris Field	No Article Debris

Vehicle Damage

Vehicle Damage Scale	12-FD-4
CDC	12FDEW3
Maximum Intrusion	0.2 in. (5 mm)

Figure 4 Summary of Test 3-52

MASH 2016 Test 3-53 Summary

0.000 s | 0.100 s | 0.200 s | 0.425 s | 0.625 s

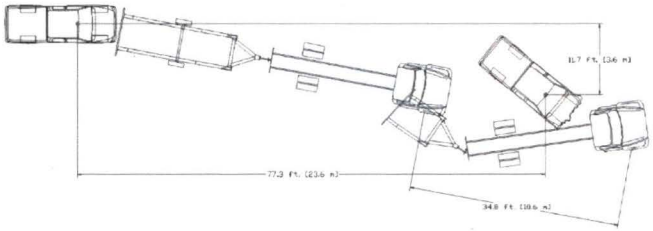

GENERAL INFORMATION

Test Agency	KARCO Engineering, LLC.
KARCO Test No	P38075-02
Test Designation	3-53
Test Date	07/26/18

TEST ARTICLE

Name / Model	TTMA-200
Type	Trailer Mounted Attenuator
Support Vehicle Length	25.0 ft. (7.6 m)
TMA Length	24.9 ft. (7.6 m)
Road Surface	Concrete
Support Vehicle Restraint	2nd gear, parking brakes engaged

TEST VEHICLE

Type / Designation	2270P
Year, Make, and Model	2012 RAM 1500
Curb Mass	5,112.4 lbs (2,319.0 kg)
Test Inertial Mass	4,996.7 lbs (2,266.5 kg)
Gross Static Mass	4,996.7 lbs (2,266.5 kg)

Impact Conditions

Impact Velocity	63.49 mph (102.18 km/h)
Impact Angle	10.1°
Location / Orientation	Offset 500 mm
Kinetic Energy	673.3 kip-ft (912.9 kJ)

Exit Conditions

Exit Velocity	21.6 mph (34.8 km/h)
Heading Angle	38.0°
Final Vehicle Position	77.3 ft. (23.6 m) Downstream 11.7 ft. (3.6 m) Right
Support Vehicle Roll Ahead	34.8 ft. (10.6 m)
Vehicle Snagging	None
Vehicle Pocketing	None
Vehicle Stability	Satisfactory
Maximum Roll Angle	-2.5 °
Maximum Pitch Angle	-8.5 °
Maximum Yaw Angle	-24.8 °

Occupant Risk

Longitudinal OIV	26.6 ft/s (8.1 m/s)
Lateral OIV	1.3 ft/s (0.4 m/s)
Longitudinal RA	-9.8 g
Lateral RA	-4.0 g
THIV	26.6 ft/s (8.1 m/s)
PHD	10.6 g
ASI	0.84

Test Article Deflections

Static	11.6 ft. (3.5 m)
Dynamic	11.6 ft. (3.5 m)
Working Width	23.4 ft. (7.1 m)
Debris Field	57.1 ft. (17.4 m) Downstream 13.0 ft. (4.0 m) Right

Vehicle Damage

Vehicle Damage Scale	12-FR-4
CDC	12FZEW3
Maximum Intrusion	0.2 in. (5 mm)

Figure 4 Summary of Test 3-53

ITEM	QTY	DESCRIPTION	ITEM	QTY	DESCRIPTION	ITEM	QTY	DESCRIPTION
a	6	5/16" x 7" Grd 5 Hex Bolt	h	12	1/2" Heavy Lock Washer	q	8	5/8" Washer
b	10	5/16" Washer	j	12	1/2" Grd 5 Hex Nut	r	8	5/8" Heavy Lock Washer
c	6	5/16" Heavy Lock Washer	k	16	9/16" x 3" Grd 5 Hex bolt	s	8	5/8" Grd 5 Hex Nut
d	6	5/16" Grd 5 Hex Nut	m	16	9/16" SAE Washer	t	4	1 1/2" Plastic Locking Plug
e	4	5/16" Tech Screws	n	16	9/16" Heavy Lock Washer	u	2	Square Tubing Plug
f	8	1/2" x 2.25" Grd 5 Hex Bolt	o	16	9/16" Grd 5 hex Nut			
g	20	1/2" Washer	p	8	5/8" x 2 1/2" Grd 5 Hex Bolt*			

ITEM	QTY	DESCRIPTION
A	1	Impact Head
B	2	Bursting Mandrel
C	2	First Tube
D	1	Trailer Frame
E	1	Axle Assembly
F	4	Plastic Guide Plates
G	2	End caps (R-right, L-left)
H	1	Hitch Assembly
J	8	Spacer
K	1	Commercial Jack
L	2	Fender Assembly (R-right, L-left)
M	2	Tire and Rim
P	1	Lunette (8 tons)
Q	1	Light Bar
R	4	Light Bar Mounting Bracket
S	1	Arrowboard and Stand (Optional)
T	1	Winch (Optional)
U	2	Whelen Lights (Optional)
V	1	Steel Ballast Plate (Optional)
W	1	Hitch Extension (Optional)
X	1	Battery Box (Optional)

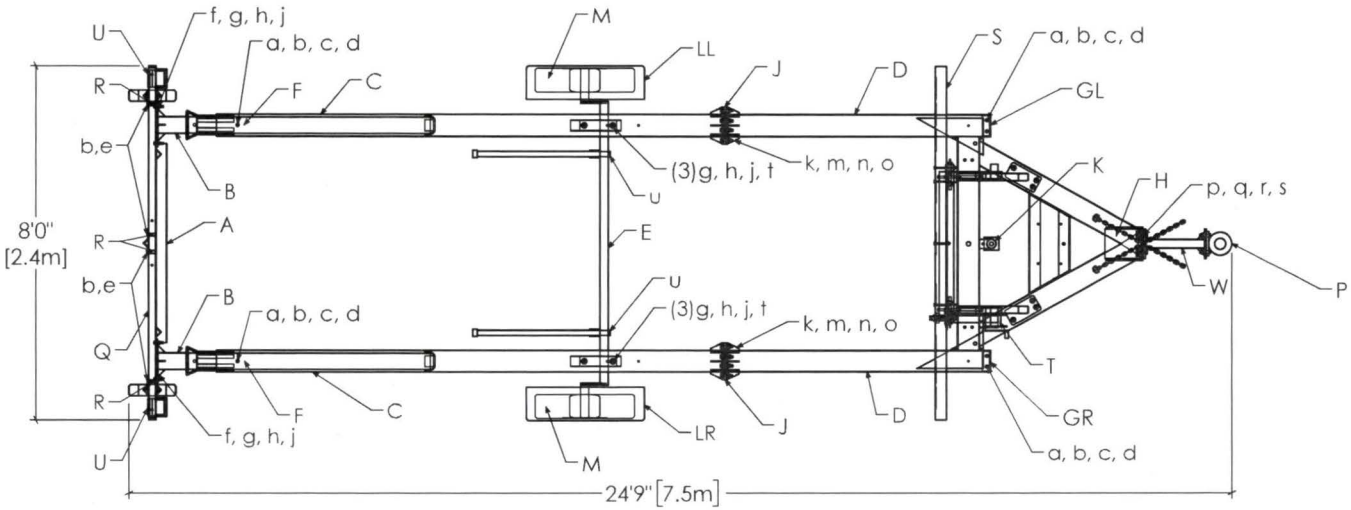

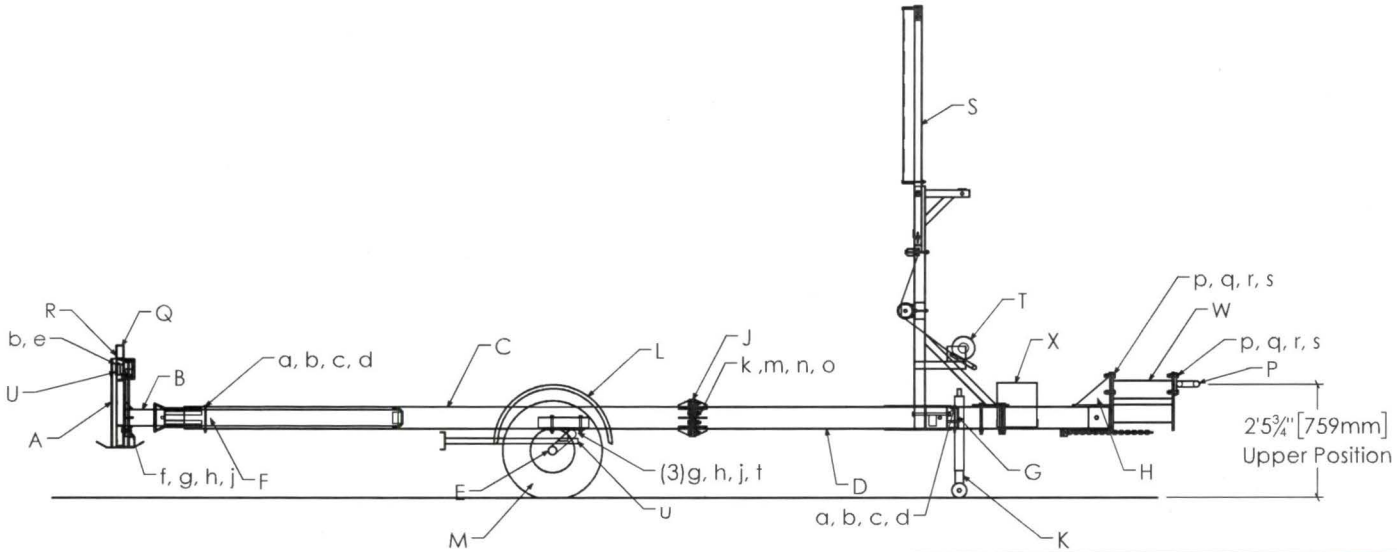

REV	DESCRIPTION	DATE
A	ADDED TOLERANCE AND FINISH DETAILS	06/21/2018
B	ADDED LIGHT BAR MOUNTING BRACKET, 5/16" TECH SCREW, AND 1/2" WASHERS	09/27/2018
C	ADDED SIGNSTAND AND ARROWBOARD, HITCH EXTENSION, LIGHT BAR, WHELEN LIGHTS, BATTERY BOX, WINCH	09/27/2018

UNLESS OTHERWISE SPECIFIED:
DIMENSIONS ARE IN INCHES
SURFACE: HOT DIP GALVANIZED
TOLERANCE:
LINEAR: ±1/16"
BOLT HOLE: +1/16", -0"
ANGULAR: ±1°

Gregory
Gregory Industries, Inc.
4100 13th Street, SW
Canton, Ohio 44710
Phone: 330-447-4800x123

TTMA-200

Assembly

Sheet: 100

Date: 1/29/2019

Drawing Name: TTMA-200

Scale: 1:50

By: JMS

Rev: A

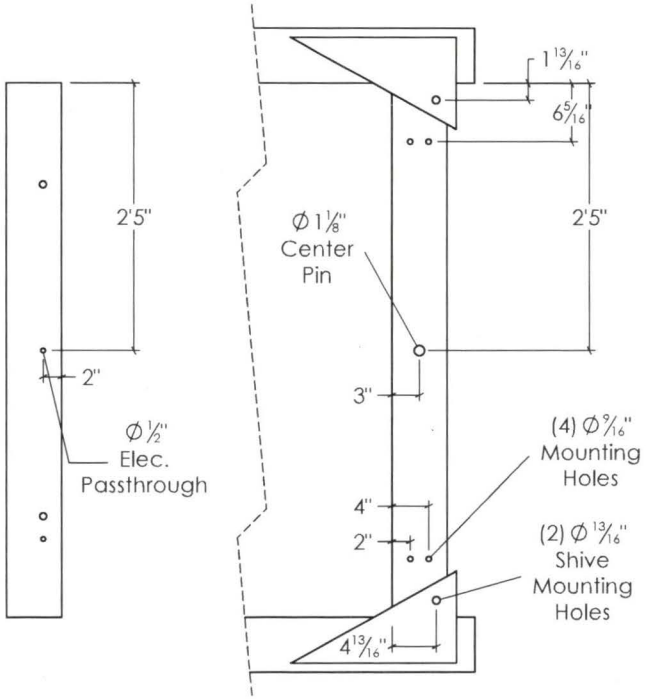

Optional Reverse Guidance Mounting Detail

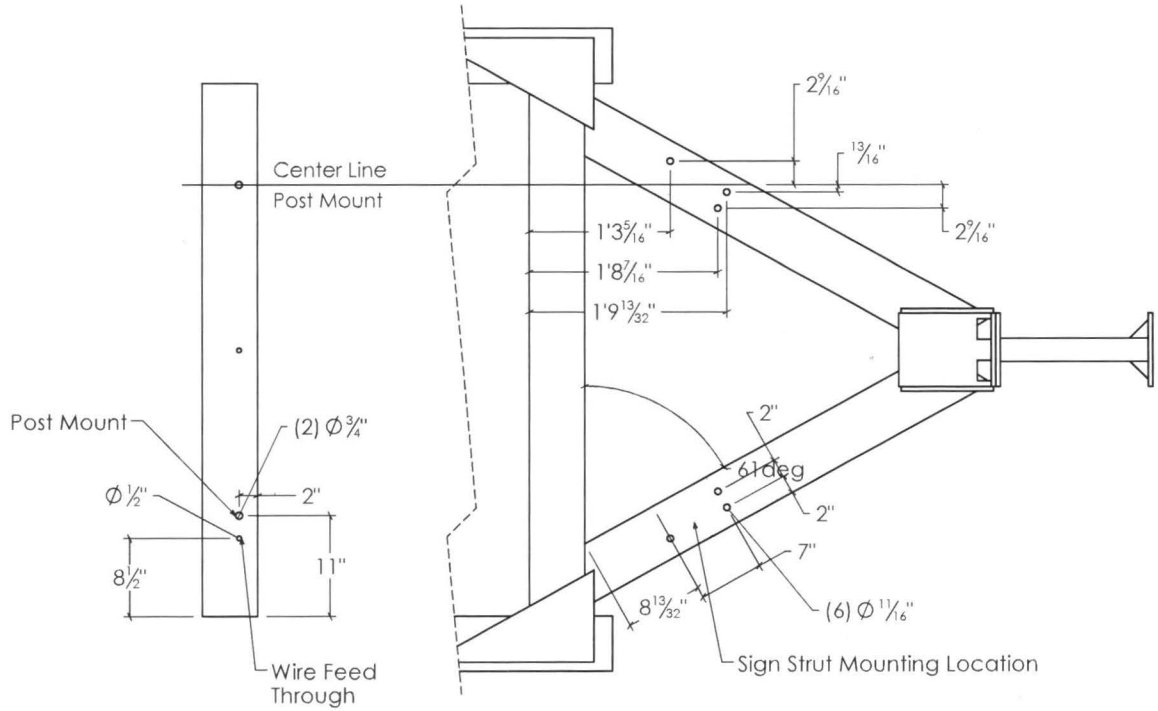

Arrow Board Mounting Detail

REV	DESCRIPTION	DATE
A	ADDED TOLERANCE AND FINISH DETAILS	06/21/2018

UNLESS OTHERWISE SPECIFIED:
DIMENSIONS ARE IN INCHES
SURFACE: HOT DIP GALVANIZED
TOLERANCE:
LINEAR: ±1/16"
BOLT HOLE: +1/16", -0"
ANGULAR: ±1°

Gregory

Gregory Industries, Inc.
4100 13th Street, SW
Canton, Ohio 44710
Phone: 330-447-4800x123

TTMA-200

Arrow Board and Reverse Guidance Mounting Detail

Drawing Name: TTMA-200
Scale: 1:20
By: JMS
Rev: A
Sheet: 107
Date: 1/29/2019

ITEM	QTY	DESCRIPTION	MATERIAL
A	1	Impact Head	
a1T	1	Front Plate - Top Lighting Package	C6X8.2 Channel
a2	5	Vertical Supports	2"x2"x1/4" Angle
a5	9	Chevron Mounting Bracket	12 Gage
Q	1	Light bar	
R	4	Light Bar Mounting Bracket	
U	2	Whelen Light or equiv (Optional)	
u1	2	Junction Box (Optional)	
u2	8	Stainless Machine Screw (Optional)	6-32 x 3" Stainless
u3	8	Nylon Locknut (Optional)	6-32 Locknut
u4	8	Stainless Flat Washer (Optional)	#6 Stainless Washer

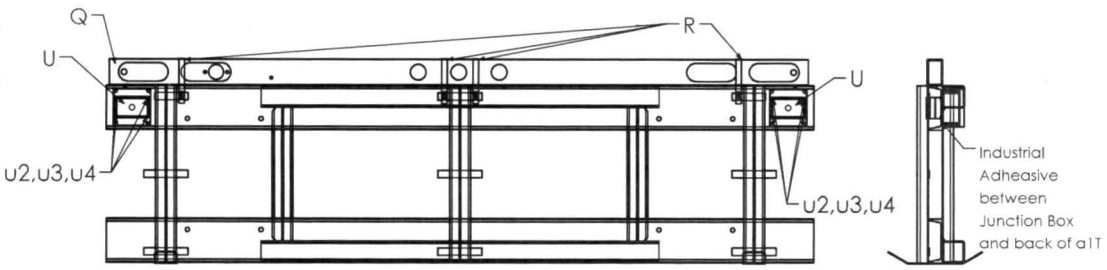

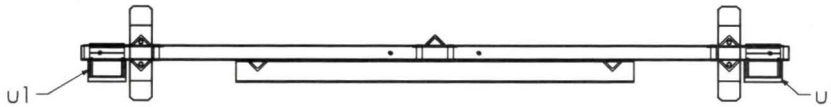

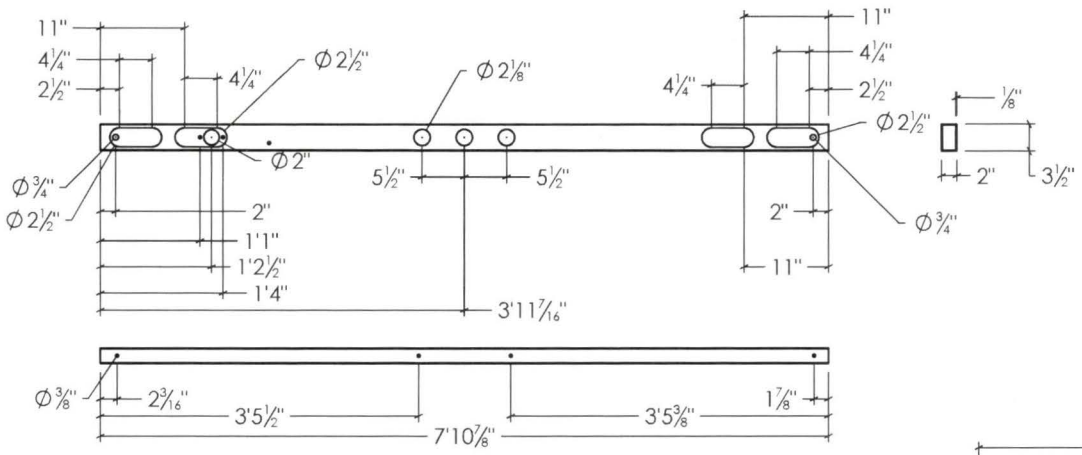

Q Light Bar

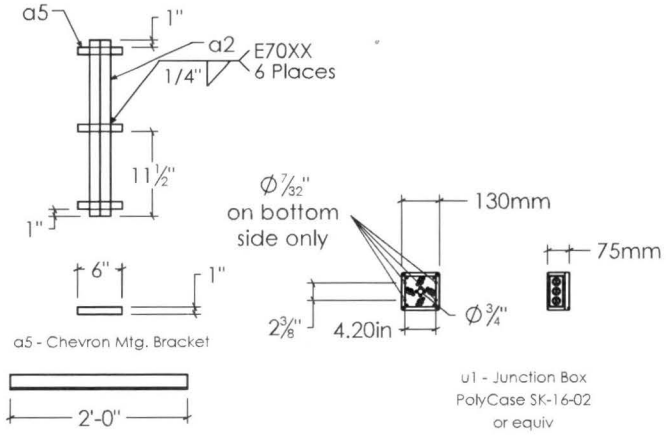

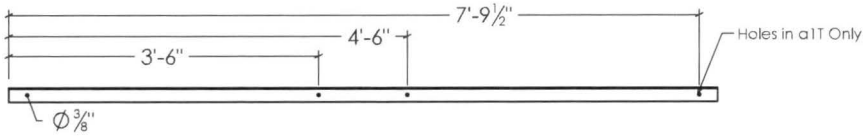

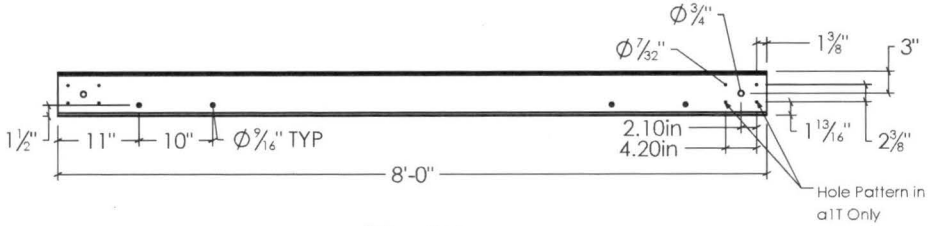

a1T Front Plate
C6X8.2 Channel

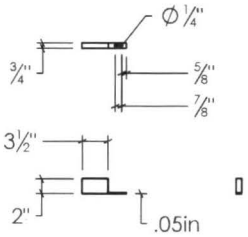

R Light Bar Mounting Bracket

REV	DESCRIPTION	DATE
A	ADDED TOLERANCE AND FINISH DETAILS	06/21/2018
B	ADDED LIGHTBAR AND LIGHTBAR BRACKET	01/29/2019

UNLESS OTHERWISE SPECIFIED:
DIMENSIONS ARE IN INCHES
SURFACE: HOT DIP GALVANIZED
TOLERANCE:
LINEAR: ±1/16"
BOLT HOLE: +1/16", -0"
ANGULAR: ±1°

Gregory

Gregory Industries, Inc.
4100 13th Street, SW
Canton, Ohio 44710
Phone: 330-447-4800x123

TTMA-200

Impact Head Lighting Package

Sheet: 109

Date: 1/29/2019

Drawing Name: TTMA-200

Scale: 1:25

By: JMS

Rev: B

ITEM	QTY	DESCRIPTION	MATERIAL
A	1	Impact Head	
a1T	1	Front Plate - Top Lighting Package	C6X8.2 Channel
a2	5	Vertical Supports	2"x2"x1/4" Angle
a5	9	Chevron Mounting Bracket	12 Gage
Q	1	Light bar	
R	4	Light Bar Mounting Bracket	
U	2	Whelen Light or equiv (Optional)	
u1	2	Junction Box (Optional)	
u2	8	Stainless Machine Screw (Optional)	6-32 x 3" Stainless
u3	8	Nylon Locknut (Optional)	6-32 Locknut
u4	8	Stainless Flat Washer (Optional)	#6 Stainless Washer

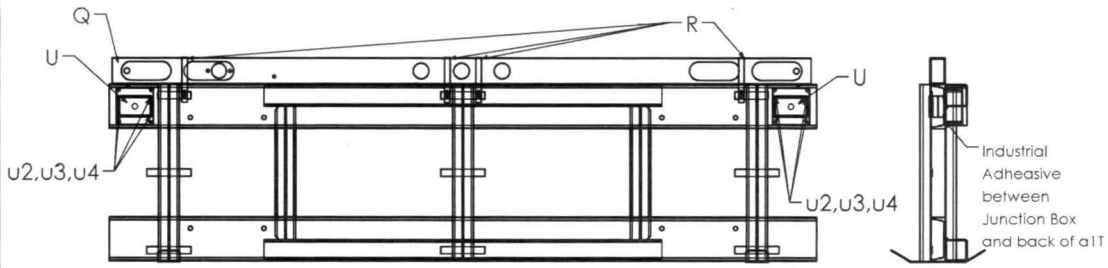

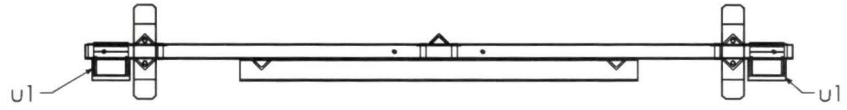

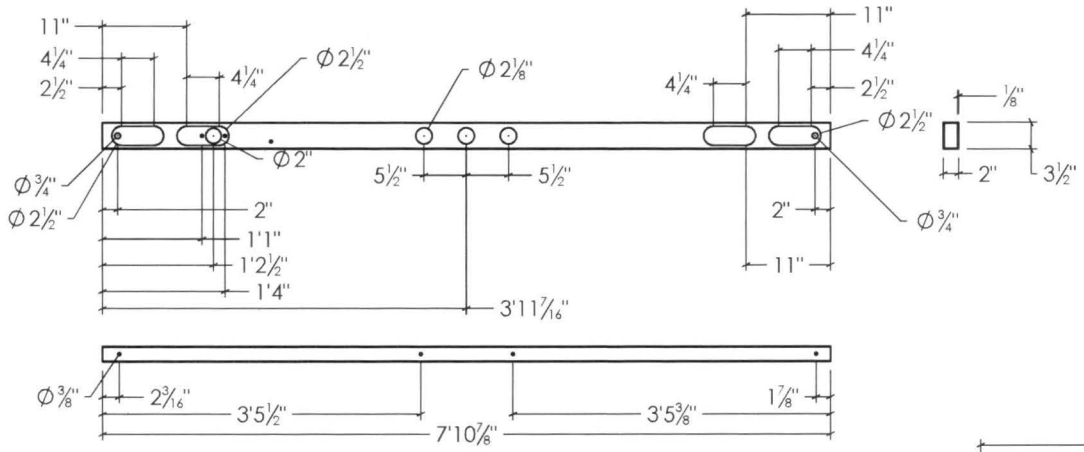

Q Light Bar

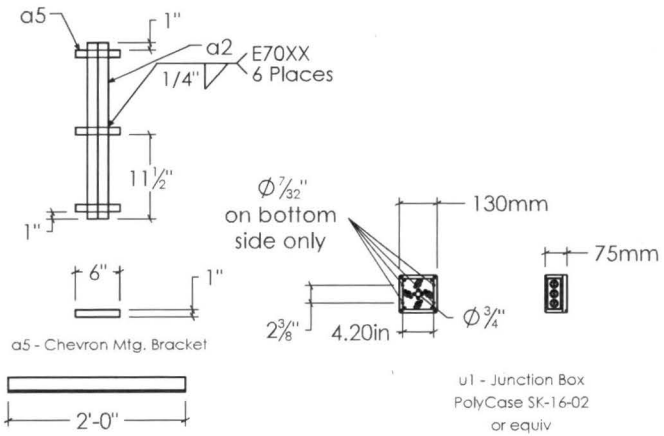

a5 - Chevron Mtg. Bracket

u1 - Junction Box PolyCase SK-16-02 or equiv

a2 - Vertical Support 2"x2"x1/4" Angle

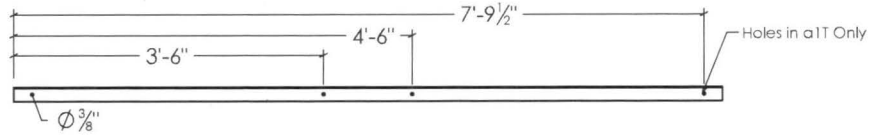

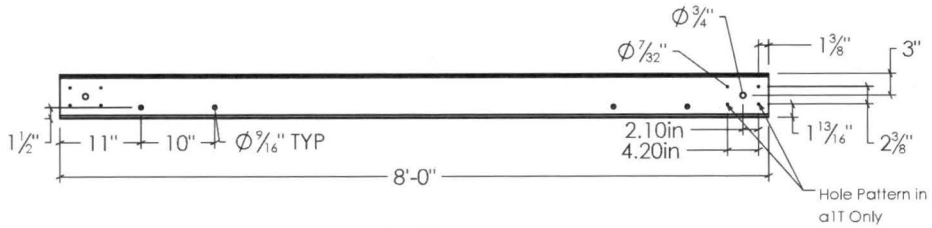

a1T Front Plate C6X8.2 Channel

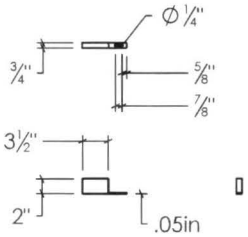

R Light Bar Mounting Bracket

REV	DESCRIPTION	DATE
A	ADDED TOLERANCE AND FINISH DETAILS	06/21/2018
B	ADDED LIGHTBAR AND LIGHTBAR BRACKET	01/29/2019

UNLESS OTHERWISE SPECIFIED:
DIMENSIONS ARE IN INCHES
SURFACE: HOT DIP GALVANIZED
TOLERANCE:
LINEAR: ±1/16"
BOLT HOLE: +1/16", -0"
ANGULAR: ±1°

Gregory

Gregory Industries, Inc.
4100 13th Street, SW
Canton, Ohio 44710
Phone: 330-447-4800x123

TTMA-200

Impact Head Lighting Package

Sheet: 109

Date: 1/29/2019

Drawing Name: TTMA-200

Scale: 1:25

By: JMS

Rev: B

ITEM	QTY	DESCRIPTION	MATERIAL
R	2	Ballast Plate	3/4" A36
r1	6	5/8" x 9" Grd 5 Hex Bolt	
r2	12	5/8" Flat Washer	
r3	6	5/8" Lock Washer	
r4	6	5/8" Grd 5 Hex Nut	

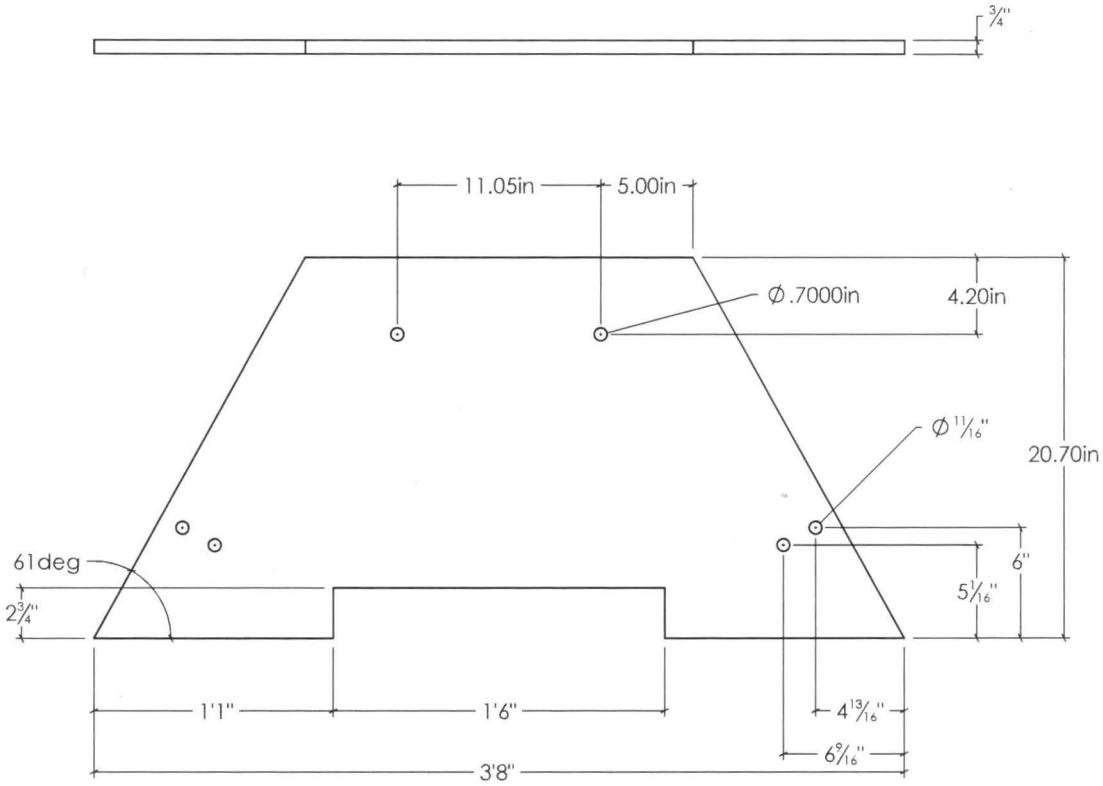

REV	DESCRIPTION	DATE
A	ADDED TOLERANCE AND FINISH DETAILS	06/21/2018

UNLESS OTHERWISE SPECIFIED:
DIMENSIONS ARE IN INCHES
SURFACE: HOT DIP GALVANIZED
TOLERANCE:
LINEAR: ±1/16"
BOLT HOLE: +1/16", -0"
ANGULAR: ±1°

Gregory

Gregory Industries, Inc.
4100 13th Street, SW
Canton, Ohio 44710
Phone: 330-447-4800x123

TTMA-200

Steel Ballast Plate (Optional)

Sheet: 110

Date: 1/29/2019

Drawing Name: TTMA-200

Scale: 1:10

By: JMS

Rev: A

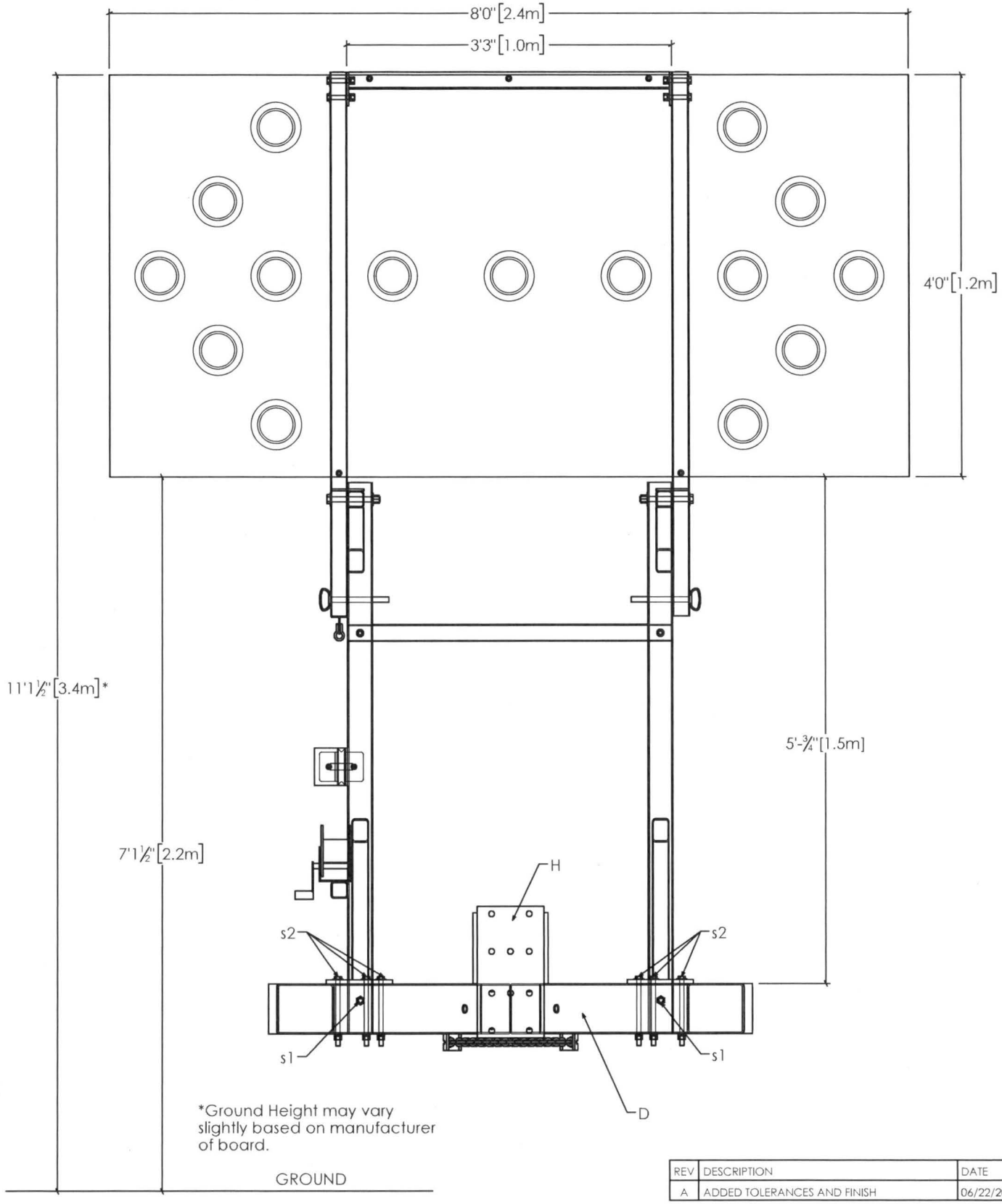

REV	DESCRIPTION	DATE
A	ADDED TOLERANCES AND FINISH	06/22/2018

ITEM	QTY	DESCRIPTION
s1	4	5/8" x 10 1/2" Grade 5 w/ Washer, Nut and Lock Washer
s2	6	1/2" X 8" Grade 5 w/Washer, Nut and Lock Washer

UNLESS OTHERWISE SPECIFIED:
DIMENSIONS ARE IN INCHES
SUFACE: HOT DIP GALVANIZED
TOLERANCE:
LINEAR: ±1/16"
BOLT HOLE: +1/16", -0"
ANGULAR: ±1°

Gregory

Gregory Industries, Inc.
4100 13th Street, SW
Canton, Ohio 44710
Phone: 330-447-4800x123

TTMA-200

Arrow Board Attachment

Sheet: 111

Date: 2/5/2019

Drawing Name: TTMA-200

Scale: 1:16

By: JMS

Rev: A